ICOM

SERVICE MANUAL

DUAL BAND TRANSCEIVER

IC-2730A
IC-2730E

S-15120XZ-C1
March 2015

Icom Inc.

INTRODUCTION

This service manual describes the latest technical information for the **IC-2730A** and **IC-2730E** DUAL BAND TRANSCEIVER, at the time of publication.

MODEL	VERSION	VERSION NUMBER	TX POWER
IC-2730A	TPE-01	#04	25 W/15 W/5 W
	USA-01	#05	50 W/15 W/5 W
	KOR-01	#06	
	EXP-01	#09	
IC-2730E	EUR-01	#02	
	ITR-01	#03	
	CHN-01	#10	

CAUTION

NEVER connect the transceiver to an AC outlet or to a DC power supply that uses more than the specified voltage. This will ruin the transceiver.

DO NOT expose the transceiver to rain, snow or liquids.

DO NOT reverse the polarities of the power supply when connecting the transceiver.

DO NOT apply an RF signal of more than 20 dBm (100 mW) to the antenna connector. This could damage the transceiver's front-end.

To upgrade quality, any electrical or mechanical parts and internal circuits are subject to change without notice or obligation.



(IC-2730A)

ORDERING PARTS

Be sure to include the following four points when ordering replacement parts:

1. 10-digit Icom part number
2. Component name
3. Equipment model name and unit name
4. Quantity required

<ORDER EXAMPLE>

1110003491	S.IC	TA31136FNG	IC-2730A	MAIN UNIT	5 pieces
8820001210	Screw	2438 screw	IC-2730E	Top cover	10 pieces

Addresses are provided on the inside back cover for your convenience.

REPAIR NOTES

1. Make sure that the problem is internal before dis-assembling the transceiver.
2. **DO NOT** open the transceiver until the transceiver is disconnected from its power source.
3. **DO NOT** force any of the variable components. Turn them slowly and smoothly.
4. **DO NOT** short any circuits or electronic parts. An insulated tuning tool MUST be used for all adjustments.
5. **DO NOT** keep power ON for a long time when the transceiver is defective.
6. **DO NOT** transmit power into a Standard Signal Generator or a Sweep Generator, otherwise the RF power may damage them.
7. **ALWAYS** connect a 50 dB to 60 dB attenuator between the transceiver and a Deviation Meter or Spectrum Analyzer, when using such test equipment.
8. **READ** the instructions of the test equipment thoroughly before connecting it to the transceiver.

Icom, Icom Inc. and the Icom logo are registered trademarks of Icom Incorporated (Japan) in Japan, the United States, the United Kingdom, Germany, France, Spain, Russia, Australia, New Zealand, and/or other countries.

TABLE OF CONTENTS

SECTION 1 SPECIFICATIONS

SECTION 2 INSIDE VIEWS

SECTION 3 DISASSEMBLY INSTRUCTION

SECTION 4 CIRCUIT DESCRIPITON

4-1 RECEIVER CIRCUITS 4-1
4-2 TRANSMIT CIRCUITS 4-5
4-3 FREQUENCY SYNTHESIZER CIRCUITS 4-7
4-4 VOLTAGE BLOCK DIAGRAM 4-8

SECTION 5 ADJUSTMENT PROCEDURES

5-1 PREPARATION 5-1
5-2 FREQUENCY ADJUSTMENT 5-3
5-3 TRANSMIT ADJUSTMENT 5-3
5-4 RECEIVE ADJUSTMENT 5-5

SECTION 6 PARTS LIST

SECTION 7 MECHANICAL PARTS

SECTION 8 BOARD LAYOUTS

SECTION 9 BLOCK DIAGRAM

SECTION 10 VOLTAGE DIAGRAM

SECTION 1 SPECIFICATIONS

◇ General

• Frequency coverage:

EUR	RX	118–174 MHz*1, 375–550 MHz*2
	TX	144–146 MHz, 430–440 MHz
ITR	RX	118–136.99166 MHz*3, 144–146 MHz, 430–434 MHz, 435–438 MHz
	TX	144–146 MHz, 430–434 MHz, 435–438 MHz
TPE	RX, TX	144–146 MHz, 430–432 MHz
USA	RX	118–174 MHz*4, 375–550 MHz*5
	TX	144–148 MHz, 430–450 MHz*5
KOR	RX, TX	144–146 MHz, 430–440 MHz
EXP, CHN	RX	118–174 MHz*4, 375–550 MHz*2
	TX	137–174 MHz*4, 400–470 MHz*2

*1 Guaranteed only 144–146 MHz *2 Guaranteed only 430–440 MHz *3 Not guaranteed *4 Guaranteed only 144–148 MHz *5 Guaranteed only 430–450 MHz

• Mode: F2D/F3E (FM/FM-N), A3E (AM/AM-N) RX only

• Number of memory channels: 1000 channels

• Number of program scan channels: 25 channels (2 edge frequencies in each channel)

• Number of call channels: 2 channels

• Scan types: Full, Band, Program, Priority, Memory channel, Bank, Skip and Tone scans

• Antenna connector: SO-239

• Antenna impedance: 50 Ω

• Usable temperature range: –10˚C to +60˚C, +14˚F to +140˚F

• Frequency stability: ±2.5 ppm (–10˚C to +60˚C, +14˚F to +140˚F)

• Frequency resolution: 5 kHz, 6.25 kHz, 8.33 kHz, 10 kHz, 12.5 kHz, 15 kHz, 20 kHz, 25 kHz, 30 kHz, 50 kHz
The 8.33 kHz step is not selectable, depending on the operating band or mode.

• Power supply: 13.8 V DC ±15% (negative ground)

• Current drain:

Transmit
Maximum current drain: ≤ 10.5 A at 25 W (TPE version)
≤ 13.0 A at 50 W (Other versions)
Receive
Standby: ≤ 1.2 A
Maximum audio: ≤ 1.8 A

• Dimensions (projections not included):

Main unit: 150(W) × 40(H) × 151(D) mm, 5.9(W) × 1.6(H) × 5.9(D) inches
Controller: 150(W) × 50(H) × 27.2(D) mm, 5.9(W) × 2(H) × 1.1(D) inches

• Weight (approximately):

Main unit: 1.2 kg, 2.6 lb
Controller: 140 g, 4.9 oz

◇ Transmitter

• Modulation system: Variable reactance frequency modulation

• Type of emission: F2D, F3E

• Maximum deviation:

FM: ≤ ±5.0 kHz
FM-N: ≤ ±2.5 kHz

• Input impedance (Mic): 600 Ω

• Spurious emission: ≤ –60 dBc

• Output power: High 25 W, Mid 15 W, Low 5 W (TPE version)
High 50 W, Mid 15 W, Low 5 W (Other versions)

◇ Receiver

- Receive system: Double superheterodyne system
- IF frequencies:

Left band	1st IF	38.85 MHz
	2nd IF	450 kHz
Right band	1st IF	46.35 MHz
	2nd IF	450 kHz

- Sensitivity (except spurious points):
  Amateur bands
  FM/FM-N (12 dB SINAD)
  ≤ 0.18 µV
  Except Amateur bands
  FM/FM-N (12 dB SINAD)
  ≤ 0.32 µV (137.000–159.995 MHz)
  ≤ 0.56 µV (160.000–174.000 MHz)
  ≤ 0.56 µV (375.000–399.995 MHz)
  ≤ 0.32 µV (400.000–499.995 MHz)
  ≤ 0.56 µV (500.000–550.000 MHz)
  AM (10 dB S/N)
  ≤ 1 µV (118.000–136.99166 MHz)
- Squelch sensitivity: ≤ 0.13 µV (Threshold)
- Selectivity:

FM	≥ 60 dB
FM-N	≥ 55 dB

- Spurious and image rejection ratio:
  ≥ 60 dB
  ≥ 55 dB (Left band UHF)
- AF output power: ≥ 2.0 W (at 10% distortion into an 8 Ω load)
- Output impedance (Speaker): 8 Ω

SECTION 2 INSIDE VIEWS

• CONTROL UNIT

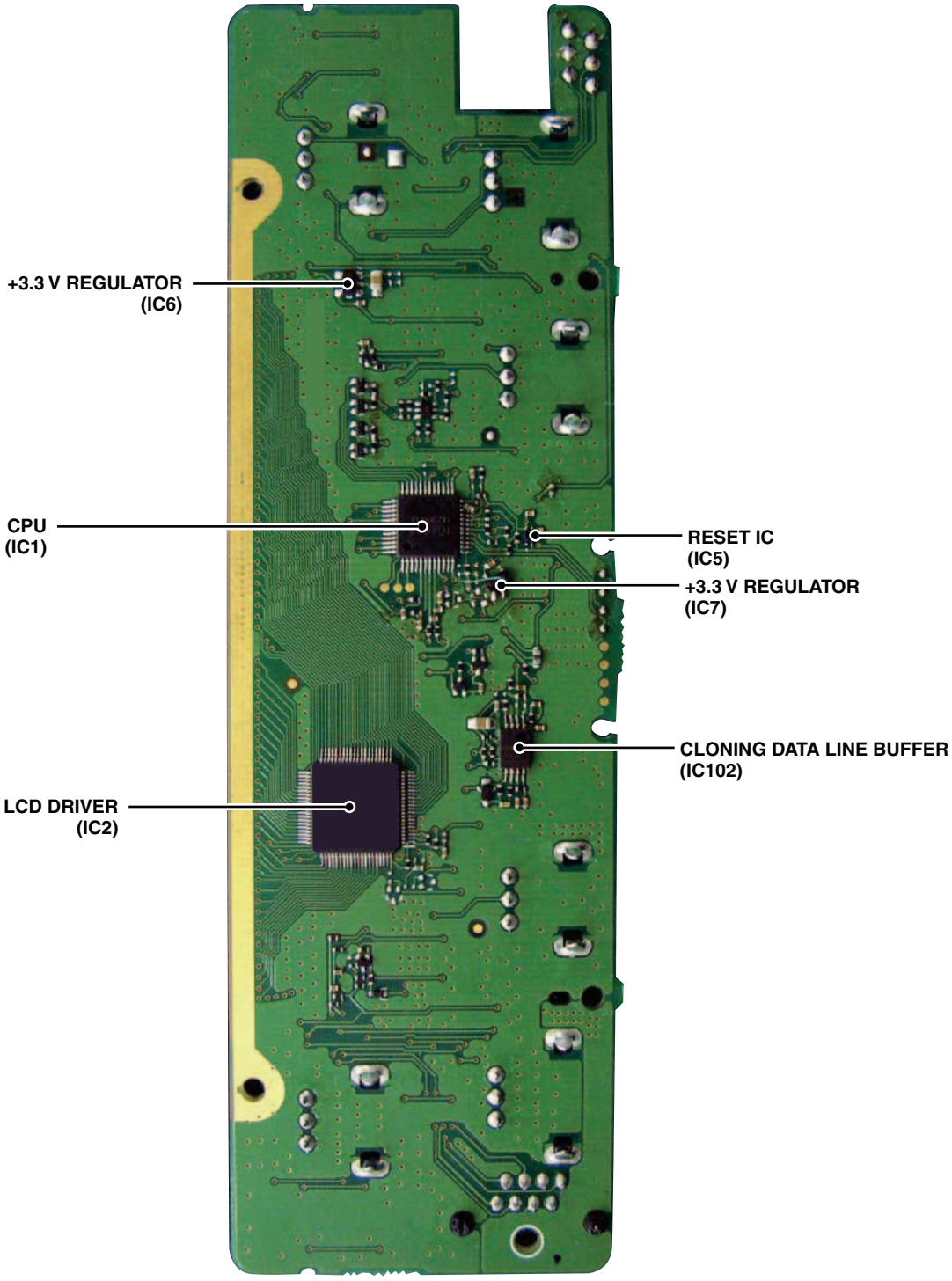

• MAIN UNIT
(TOP VIEW)

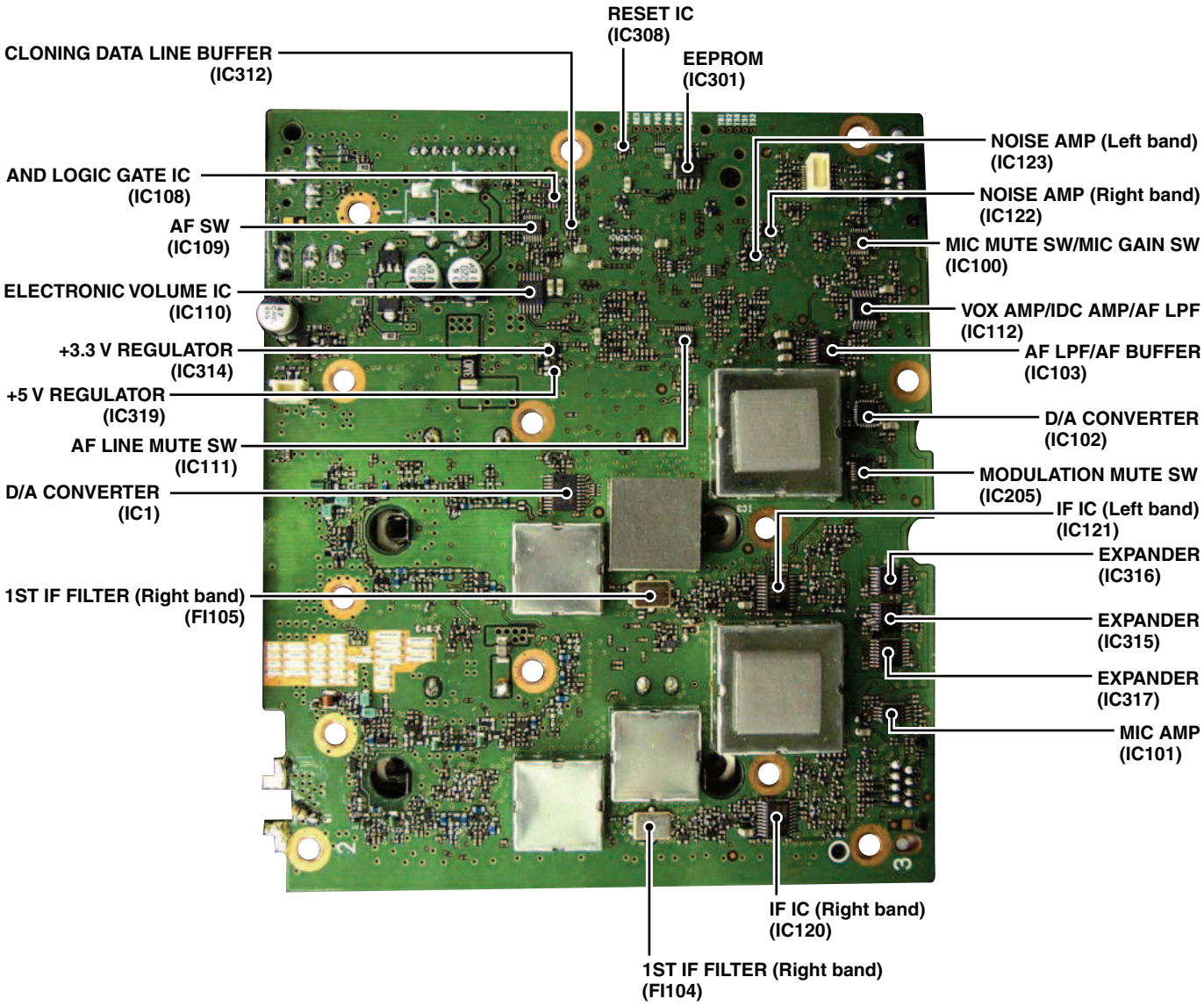

• MAIN UNIT
(BOTTOM VIEW)

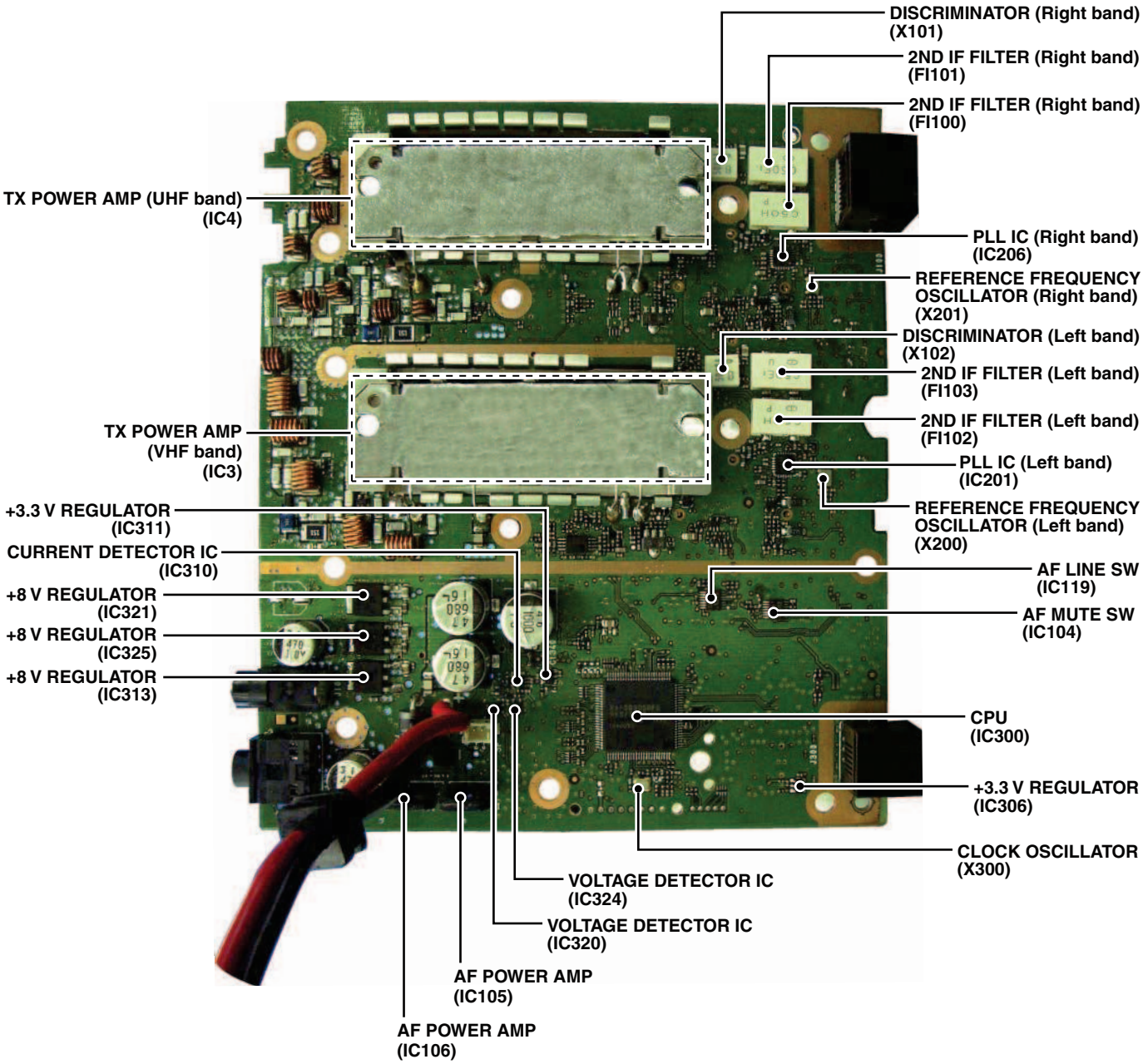

SECTION 3 DISASSEMBLY INSTRUCTION

1. Removing the CONTROL UNIT

1) Remove all knobs from the controller.

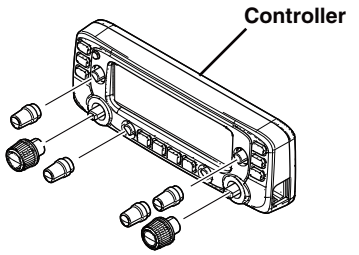

2) Remove four screws from the rear panel.
3) Separate the rear panel from the front panel assembly.

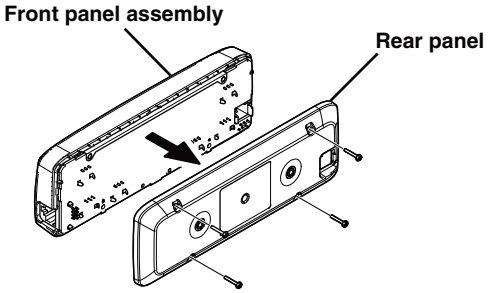

4) Remove the CONTROL UNIT from the front panel.

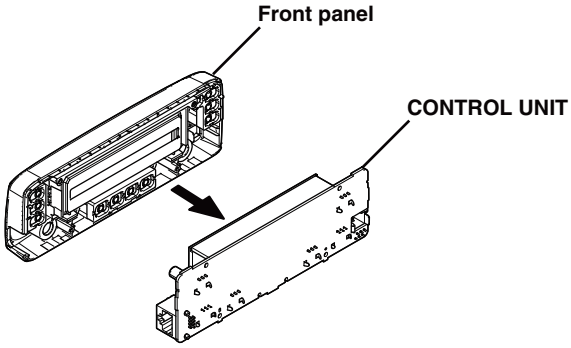

2. Removing the MAIN UNIT

1) Remove eight screws from the top cover.
2) Remove the top cover from the chassis.

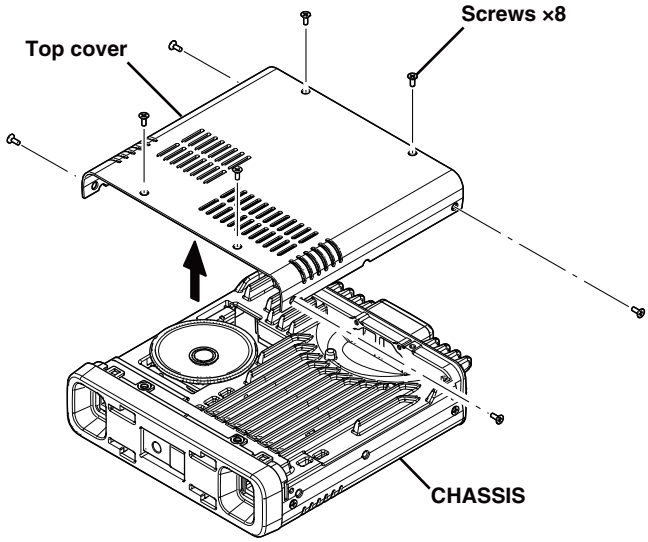

3) Disconnect the speaker cable from the MAIN UNIT.
4) Remove the clip from the chassis.

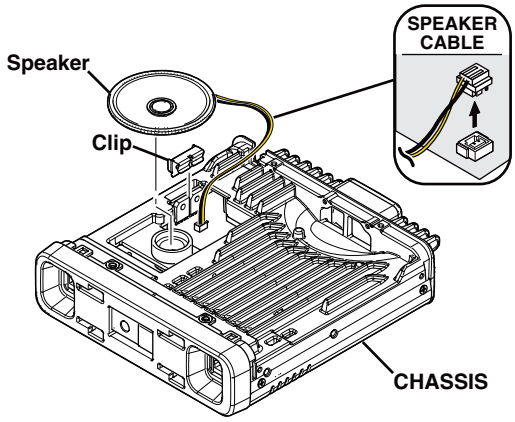

5) Remove seven screws from the bottom cover.

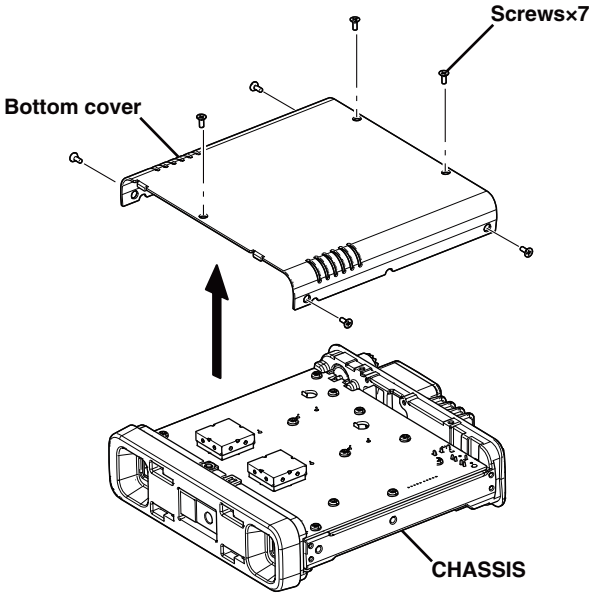

(Continued on the next page.)

6) Unsolder three points at the antenna connector.
7) Disconnect the cooling fan cable.

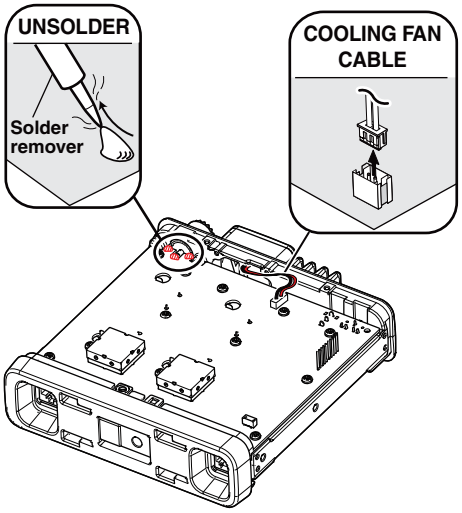

8) Remove total of 17 screws from the MAIN UNIT.

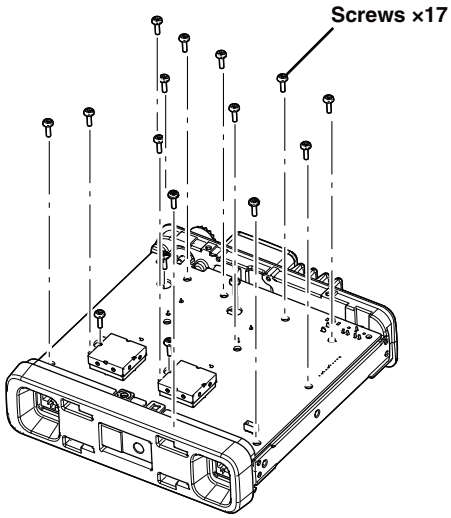

9) Remove the MAIN UNIT from the chassis.

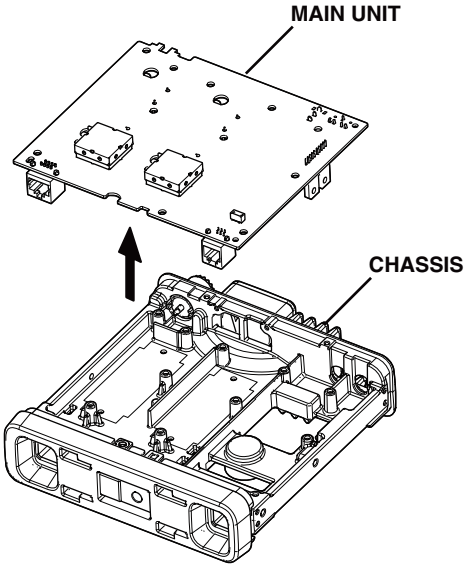

SECTION 4 CIRCUIT DESCRIPTION

4-1 RECEIVE CIRCUITS

RF CIRCUITS

The received signal from the antenna connector passed through the LPF (L90, L94, L96, C409, C418 and C428). The filtered signal is applied to either the VHF or UHF band's RF circuit.

VHF BAND (118–174 MHz)

The received VHF band signal from the LPF (L90, L94, L96, C409, C418 and C428) is passed through the LPF (L79, L83, L87, C378, C386 and C394) and TX/RX SW (D66, D69 to D71 and D77), and applied to the PRE-AMP (Q24).

• Left band

The amplified signal is passed through the attenuator (D34) and tuned BPF (D28, D88, L31, L34, C119, C127, C128 and C135), and applied to the RF AMP (Q20). The amplified signal is passed through the tuned BPF (D20, D87, L10, L18, C60, C71, C74, C79 and C86), and then applied to the 1st mixer (Q145).

• Right band

The amplified signal is passed through the attenuator (D33) and tuned BPF (D27, D85, L23, L32, L33, C116, C125, C126 and C132), and applied to RF AMP (Q19). The amplified signal is passed through the tuned BPF (D19, D86, L9, L17, C57, C69, C70, C77 and C84), and then applied to the 1st mixer (Q143).

UHF BAND (375–550 MHz)

The received UHF band signal from the LPF (L90, L94, L96, C409, C418 and C428) is passed through the HPF (L84, L88, C392, C395 and C429), TX/RX SW (D68, D73, D75, D84, L86, L92, C387, C396 and C413), and applied to the PRE-AMP (Q23).

• Left band

The amplified signal is passed through the attenuator (D32) and tuned BPF (D22, D24, D26, D30, L21, L28 and L101), and applied to the RF AMP (Q18). The amplified signal is passed through the tuned BPF (D12, D16, D91, D92, L4, L12, L16, L102, C33, C65 and C67), and then applied to the 1st mixer (Q146).

• Right band

The amplified signal is passed through the attenuator (D31) and tuned BPF (D21, D23, D25, D29, L22, L27 and L99), and applied to the RF AMP (Q17). The amplified signal is passed through the tuned BPF (D11, D15, D89, D90, L3, L11, L15, L100, C32, C63 and C66), and then applied to the 1st mixer (Q144).

RF CIRCUITS

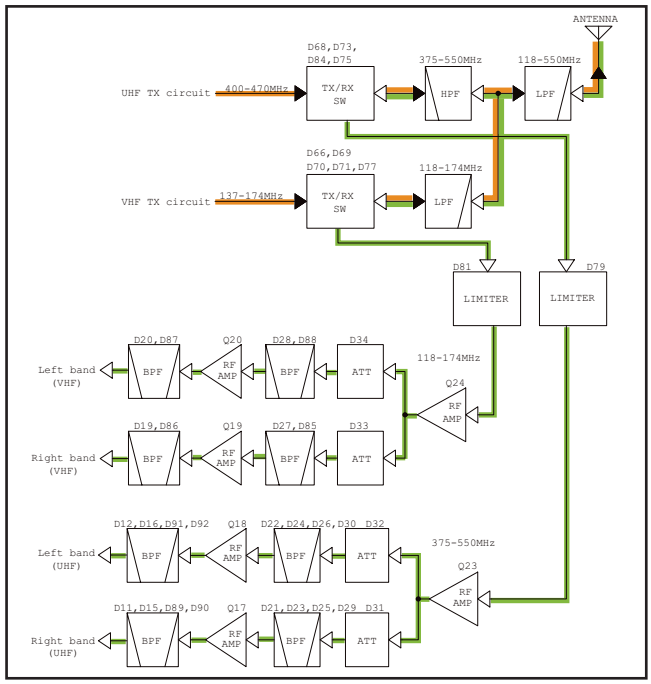

1ST IF CIRCUITS

VHF BAND

• Left band

The received signal from the RF circuit and 1st LO signal are applied to the 1st IF mixer (Q145) and mixed, resulting in the 38.85 MHz 1st IF signal.

The 1st IF signal is applied to the 1st IF filter (FI105), through the band SW (D121).

• Right band

The received signal from the RF circuit and 1st LO signal are applied to the 1st IF mixer (Q143) and mixed, resulting in the 46.35 MHz 1st IF signal.

The 1st IF signal is applied to the 1st IF filter (FI104), through the band SW (D119).

UHF BAND

• Left band

The received signal from the RF circuit and 1st LO signal are applied to the 1st IF mixer (Q146) and mixed, resulting in the 38.85 MHz 1st IF signal.

The 1st IF filter is applied to the 1st IF filter (FI105), through the band SW (D122).

• Right band

The received signal from the RF circuit and 1st LO signal are applied to the 1st IF mixer (Q144) and mixed, resulting in the 46.35 MHz 1st IF signal.

The 1st IF signal is applied to the 1st IF filter (FI104), through the band SW (D120).

The filtered signal is amplified by the IF AMP (Q137), and applied to the IF IC (IC120, pin 20).

1ST IF CIRCUITS

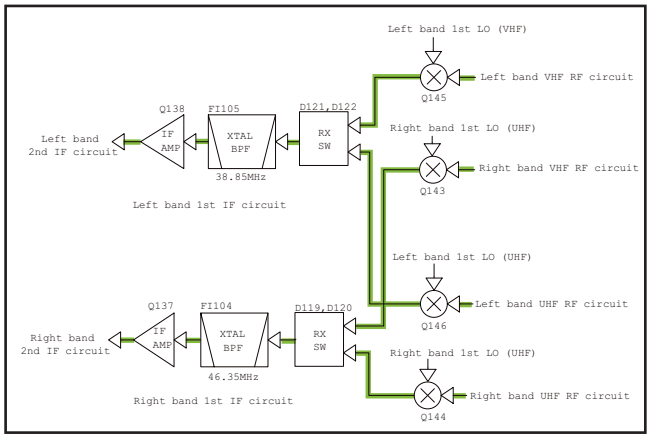

2ND IF CIRCUITS

• Left band

IC121 is an IF IC, which contains the 2nd mixer, limiter AMP, noise AMP, quadrature detector, AM detector, AGC controller, signal strength detector, and so on.

The 1st IF signal from the 1st IF AMP (Q138) and 38.4 MHz 2nd LO signal are mixed, resulting in the 450 kHz 2nd IF signal.

The 2nd IF signal is output from pin 3, and passed through the ceramic filter (FI102: For FM-N or FI103: For FM), and then applied to IC121 from pins 5 and 7.

• Right band

IC120 is an IF IC, which contains the 2nd mixer, limiter AMP, noise AMP, quadrature detector, AM detector, AGC controller, signal strength detector, and so on.

The 1st IF signal from the 1st IF AMP (Q137) and 45.9 MHz 2nd LO signal are mixed, resulting in the 450 kHz 2nd IF signal.

The 2nd IF signal is output from pin 3, and passed through the ceramic filter (FI100: For FM-N or FI101: For FM), and then applied to IC120 from pins 5 and 7.

FM DEMODULATION CIRCUITS

• Left band

The 2nd IF signal applied pin 7 is amplified by the limiter AMP, and then demodulated by the quadrature detector with the ceramic resonator (X102).

The demodulated AF signal is output from pin 11, and then applied to the AF circuit, through the AF SW (IC119, pins 8, 9).

• Right band

The 2nd IF signal applied pin 7 is amplified by the limiter AMP, and then demodulated by the quadrature detector with the ceramic resonator (X101).

The demodulated AF signal is output from pin 11, and then applied to the AF circuit, through the AF SW (IC119, pins 1, 2).

AM DETECTOR CIRCUITS

• Left band

The 2nd IF signal applied from pin 5 is amplified by the IF AMP, and then demodulated by the amplitude detector in the IF IC (IC121).

The demodulated AF signal is output from pin 14, and then applied to the AF circuits, through the AF SW (IC119, pins 11, 10).

In the AM mode, the AGC circuit in the IF IC automatically adjusts the gain of RF AMPs (Q18 and Q20) and 1st IF AMP (Q138), to keep the signal level constant.

The demodulated AF signal is applied to the RX AF circuit.

• Right band

The 2nd IF signal applied from pin 5 is amplified by the IF AMP, and then demodulated by the amplitude detector in the IF IC (IC120).

The demodulated AF signal is output from pin 14, and then applied to the AF circuits, through the AF SW (IC119, pins 4, 3).

In the AM mode, the AGC circuit in the IF IC automatically adjusts the gain of RF AMPs (Q17 and Q19) and 1st IF AMP (Q137), to keep the signal level constant.

The demodulated AF signal is applied to the RX AF circuit.

2ND IF AND DEMODULATOR CIRCUITS (Left band)

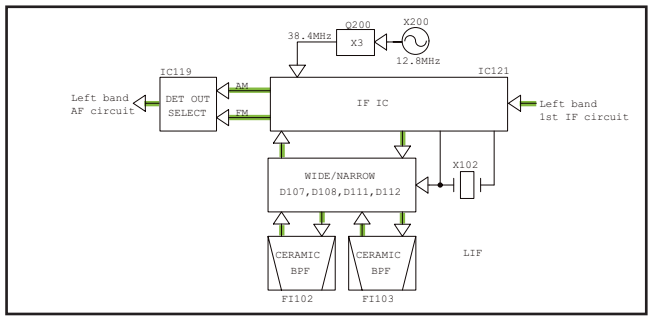

2ND IF AND DEMODULATOR CIRCUITS (Right band)

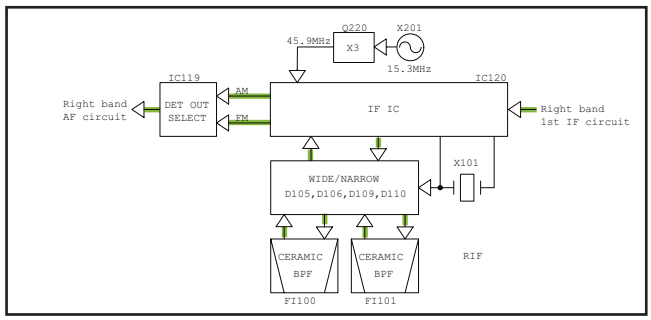

RX AF CIRCUITS

• Left band

The demodulated AF signal from the AF SW (IC119) is passed through the AF mute SW (IC111, pins 4, 3) and AF filter (Q113), and then applied to the volume IC (IC110, pin 4), which adjusts the AF signal in level.

The level-adjusted AF signal from the volume IC (IC110, pin 11) is passed through the AF SW (IC109, pins 2, 1), which selects the AF signal from Left and Right bands.

• Right band

The demodulated AF signal from the AF SW (IC119) is passed through the AF mute SW (IC111, pins 8, 9) and AF filter (Q112), and then applied to the volume IC (IC110, pin 3), which adjusts the AF signal in level.

The level-adjusted AF signal from the volume IC (IC110, pin 12) is passed through the AF SW (IC109, pins 3, 4), which selects the AF signal from Left and Right bands.

When output from [EXTERNAL SPEAKER JACK1]

The output signal from the AF SW (IC109) is passed through the AF MUTE SW (Q104 and Q105), and applied to the AF AMP (IC105, pin 1).

The amplified AF signal is applied to the internal speaker (CHASSIS: SP1) or an external speaker, through [EXTERNAL SPEAKER JACK1] (J101).

When output from [EXTERNAL SPEAKER JACK2]

The output signal from the AF SW (IC109) is passed through the AF MUTE SW (Q106), and applied to the AF AMP (IC106, pin 1).

The amplified AF signal is applied to [EXTERNAL SPEAKER JACK2] (J102).

• RX AF CIRCUITS

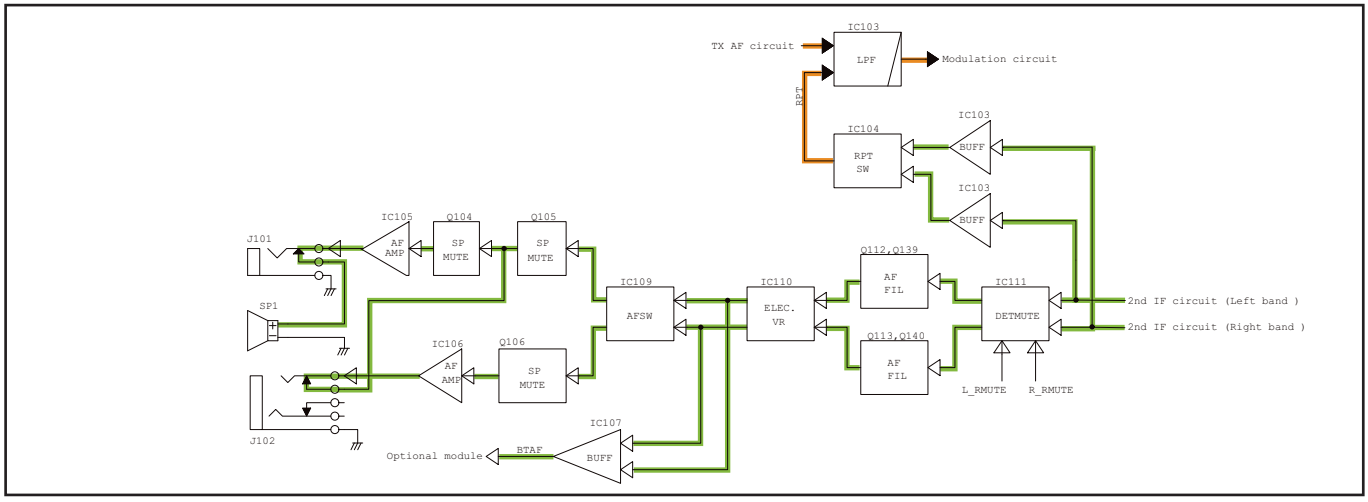

4-2 TRANSMIT CIRCUITS

TX AF CIRCUIT (CONTROL AND MAIN UNITS)

When the microphone is connected to the controller:

The AF signal from the microphone is applied to the MIC AMP (CONTROL UNIT: IC102, pin 2), through [MIC] (CONTROL UNIT: J101). The amplified MIC signal is applied to the MIC line SW (MAIN UNIT: IC100, pin 1) on the MAIN UNIT, through the control cable.

When the microphone is directly connected to the MAIN UNIT:

The AF signal from the microphone is applied to the MIC AMP (MAIN UNIT: IC101, pin 5), through [MIC] (MAIN UNIT: J100).

The amplified MIC signal is passed through the MIC line SW (MAIN UNIT: IC100, pins 11, 10), MIC gain SW (MAIN UNIT: Q151 and Q152), MIC mute SW (MAIN UNIT: IC100, pins 9, 8) and the HPF (MAIN UNIT: R774, C861 and C862), and then adjusted in amplitude by the IDC AMP (MAIN UNIT: IC112, pins 3, 1), and passed through the splatter filter (MAIN UNIT: IC112, pins 13, 14) and LPF (MAIN UNIT: IC103, pins 6, 7), and then applied to the D/A converter (MAIN UNIT: IC102, pin 13).

The level-adjusted MIC signal is passed through the modulation mute SW (MAIN UNIT: VHF band IC205, pins 2, 1/UHF band IC205, pins 3, 4), and then applied to the modulation circuit as the modulation signal.

TX AF CIRCUIT

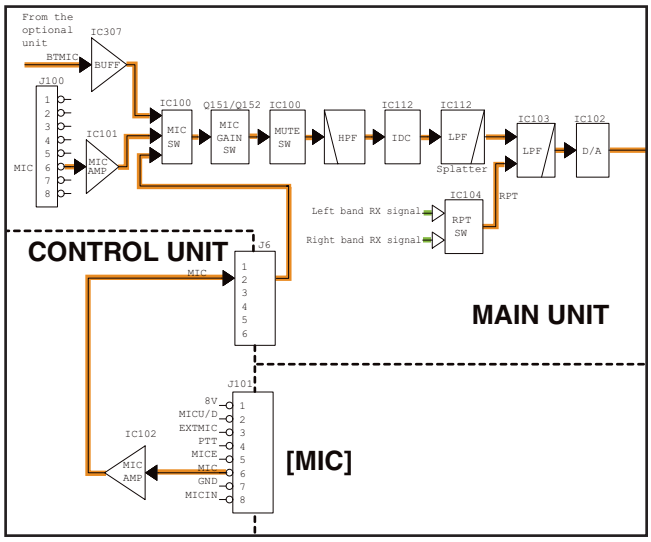

MODULATION CIRCUITS (MAIN UNIT)

The modulation signal from the TX AF circuit is applied to the VCO as the frequency modulation signal.

VHF BAND

The modulation signal is applied to the VHF VCO (Q211, D203, D204, D206, D228 and D342).

The modulated VCO output signal is amplified by the buffer (Q215), passed through the LO SW (D208), amplified by the LO AMP (Q240), and then applied to the TX AMP circuit as the TX signal, through another LO SW (D50).

UHF BAND

The modulation signal is applied to the UHF VCO (Q232, D223, D224, D227, D229 and D236).

The modulated VCO output signal is amplified by the buffer (Q235), and then applied to the TX AMP circuit as the TX signal.

MODULATION CIRCUITS

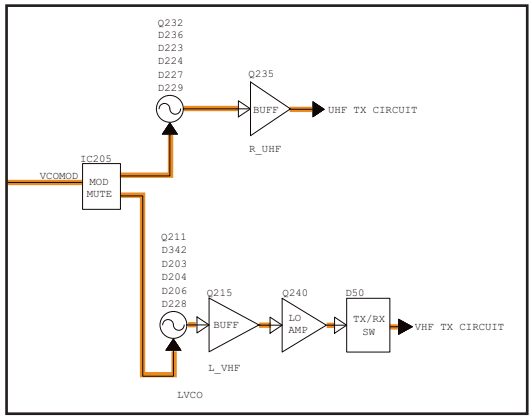

TX AMP CIRCUITS (MAIN UNIT)

VHF BAND

The TX signal from the VHF band modulation circuit is passed through the LPF (L50, L51, C215, C220 and C225) and ATT (R146, R147 and R151), and then sequentially amplified by the pre-drive AMP (Q36), drive AMP (Q40) and power AMP (IC3).

The amplified TX signal is passed through the LPF (L67, L68, C291, C297, C301, C302, C326, C331 and C332), TX output power detector (D59 and D63), ANT SW (D66) and two LPFs: (L79, L83, L87, C378, C386, C394 and L90, L94, L96, C409, C418, C428), before being applied to the antenna.

UHF BAND

The TX signal from the UHF band modulation circuit is amplified by the LO AMP (Q37), passed through the HPF (L52 and C232), ATT (R155, R156 and R162), and then sequentially amplified by the pre-drive AMP (Q38), drive AMP (Q41) and power AMP (IC4).

The amplified TX signal is passed through the LPF (L69, L73, C310, C319, C322, C323, C350, C358 and C359), TX output power detector (D62 and D67), ANT SW (D68 and D84) and HPF (L84, L88, C391, C392, C395, C402, C429 and C430) and LPF (L90, L94, L96, C409, C418 and C428), before being applied to the antenna.

APC CIRCUITS

VHF BAND

A portion of RF signal is rectified by the power detector diodes (D59 and D63) at the LPF (L67, L68, C291, C297, C301, C302, C326, C331 and C332), and the produced DC voltage, which represents the TX power level, is used as the TX power sensing voltage.

The TX power sensing voltage is applied to the APC AMP (IC2, pin 2), and the power setting voltage from the D/A converter (IC102, pin 8) is also applied to the AMP from pin 3, resulting in the output voltage which is inversely proportional to the TX power sensing voltage.

When the TX power sensing voltage increases, the output voltage, which controls the gain of the power AMP (IC3), decreases to control the TX power constant.

UHF BAND

A portion of RF signal is rectified by the power detector diodes (D62 and D67) at the LPF (L69, L73, C310, C319, C322, C323, C350, C358 and C359), and the produced DC voltage, which represents the TX power level, is used as the TX power sensing voltage.

The TX power sensing voltage is applied to the APC AMP (IC2, pin 6), and the power setting voltage from the D/A converter (IC102, pin 7) is also applied to the AMP from pin 5, resulting in the output voltage which is inversely proportional to the TX power sensing voltage.

When the TX power sensing voltage increases, the output voltage, which controls the gain of the power AMP (IC4), decreases to control the TX power constant.

TX AMP CIRCUITS

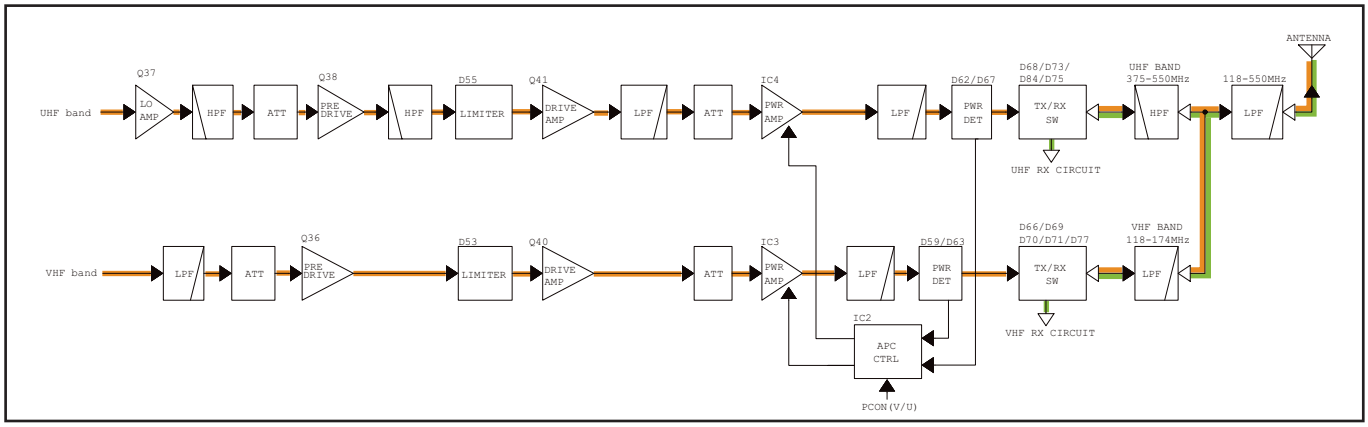

4-3 FREQUENCY SYNTHESIZER CIRCUITS (MAIN UNIT)

VCOs

The IC-2730A/E has total of four VCOs: two VCOs for the left band and another two for the right band.

• Left band

VHF VCO

The VHF VCO (Q211, D203, D204, D206, D228 and D342) generates the VHF TX signal. The output of buffer (Q215) is amplified by the LO AMP (Q240), and then applied to the VHF TX AMP circuit, through the LO SW (D50).

UHF VCO

The UHF VCO (Q210, D201, D202 and D205) generates the 1st LO signal (for receiving a UHF signal on the left band).

The output of buffer (Q214) is amplified by the LO AMP (Q240), and then applied to the 1st IF mixer (Q146), through the LO SW (D213) and LPF (L315, C988 and C995).

• Right band

VHF VCO

The VHF VCO (Q233, D225, D226 and D230) generates the 1st LO signal (for receiving a VHF signal on the right band).

The output of buffer (Q236) is amplified by the LO AMP (Q238), and then applied to the 1st IF mixer (Q143), through the LO SW (D235) and LPF (L338, L339, C1105 and C1106).

UHF VCO

The UHF VCO (Q232, D223, D224, D227, D229 and D236) generates the UHF TX signal. The output of buffer (Q235) is applied to the UHF TX AMP circuit.

• Left band frequency synthesizer circuit

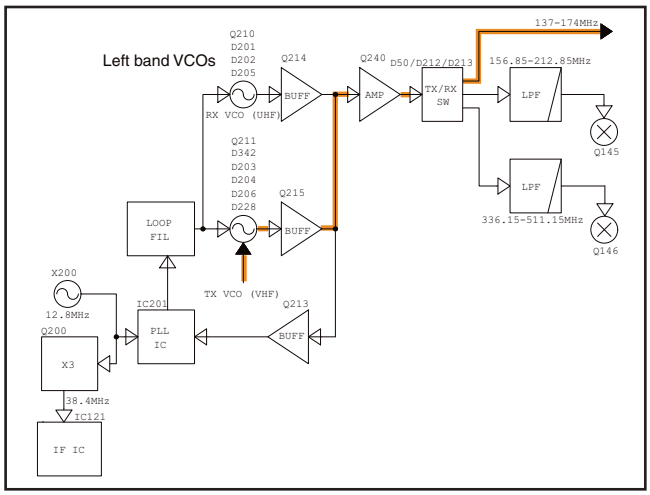

PLL

The PLL circuit controls the VCO oscillating frequency by comparing the reference signal and the fed back VCO signal. When the oscillation frequency drifts, its phase changes from that of the reference frequency, causing a lock voltage change to compensate for the drift in the VCO oscillating frequency.

• Left band

A portion of VHF and UHF VCOs output signal is amplified by the buffer (Q213), and then fed back to the PLL IC (IC201, pin 17).

The PLL IC (IC201) phase-compares the output of reference frequency oscillator (TCXO: X200) and VCO, and the phase difference is output as the charge pump current. The current is passed though the loop filter (R715, R717, R719, R722, C924, C926 to C928 and C930) to be converted into the lock voltage, which controls the oscillating frequency of VCO.

• Right band

A portion of VHF and UHF VCOs output signal is amplified by the buffer (Q234), and then fed back to the PLL IC (IC206, pin 17).

The PLL IC (IC206) phase-compares the output of reference frequency oscillator (TCXO: X201) and VCO, and the phase difference is output as the charge pump current. The current is passed though the loop filter (R797, R799, R802, R805, C1041, C1043 to C1045 and C1048) to be converted into the lock voltage, which controls the oscillating frequency of VCO.

• Right band frequency synthesizer circuit

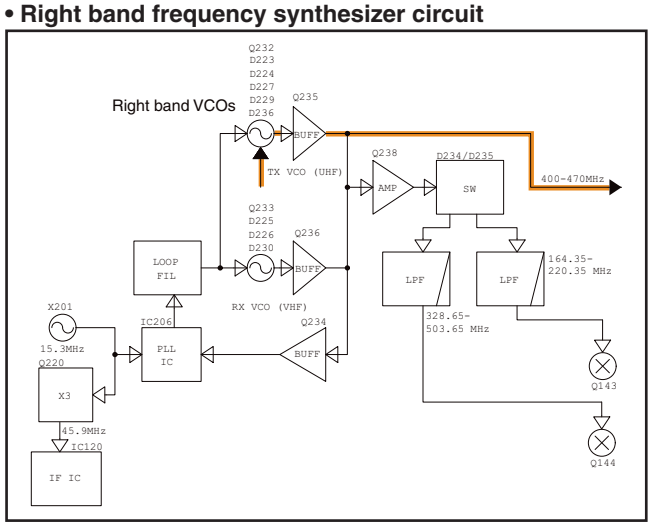

4-4 VOLTAGE BLOCK DIAGRAM

Voltage from the power supply is routed throughout the transceiver, through regulators and switches.

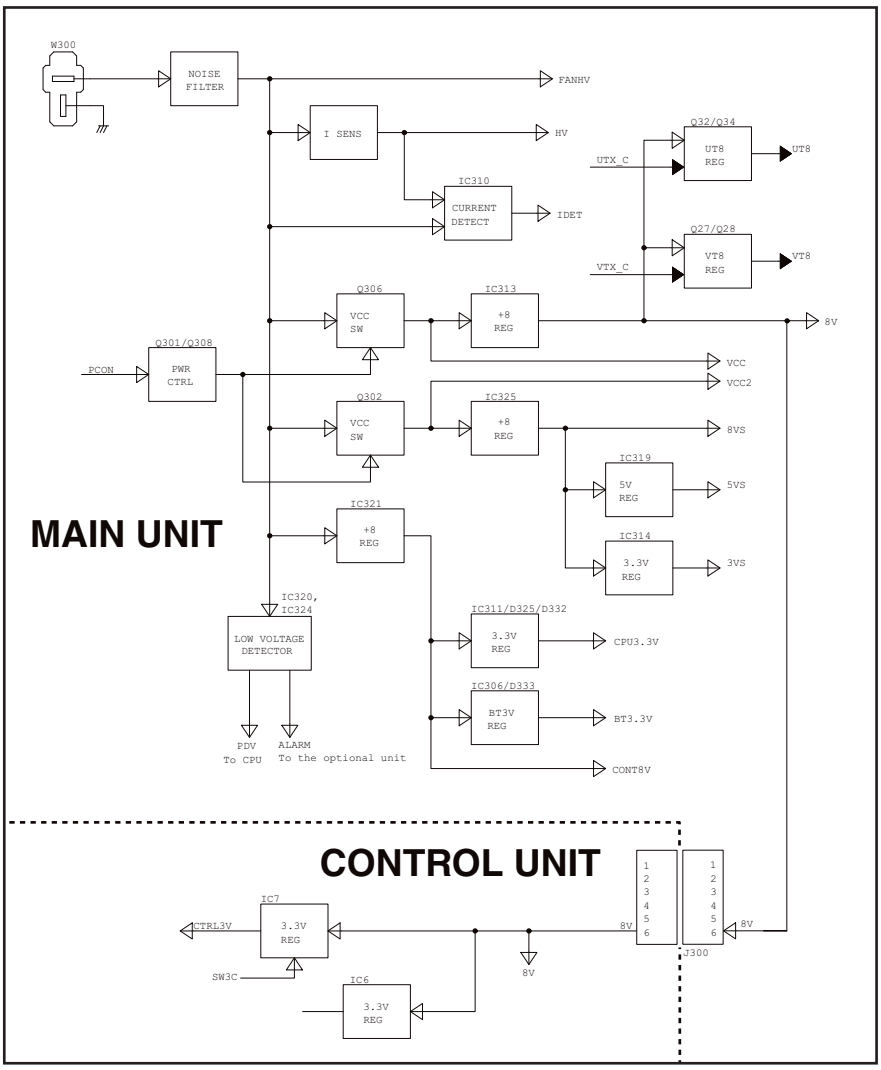

SECTION 5 ADJUSTMENT PROCEDURE

5-1 PREPARATION

■ REQUIRED EQUIPMENTS

EQUIPMENT	GRADE AND RANGE	EQUIPMENT	GRADE AND RANGE
JIG cable	Modified modular cable. (See the illustration shown below.)	Frequency counter	Range: 0.1–600 MHz Accuracy: ±1 ppm or better Input level: Less than 1 mW
RF power meter (50 Ω terminated)	Measuring range: 0.1–60 W Frequency range: 100–600 MHz SWR: Less than 1.2 : 1		
Modulation Analyzer	Frequency range: 30–600 MHz Measuring range: 0 to ±10 kHz	Standard signal generator (SSG)	Frequency range: 0.1–600 MHz Output level: –20 dBμ to 90 dBμ (–127 to –17 dBm)
AC millivoltmeter	Measuring range: 10 mV to 10 V		
Audio generator (AG)	Frequency range: 300–3000 Hz Output level: 1–500 mV	Attenuator	Attenuation: 40 dB Capacity: More than 60 W

■ JIG CABLE

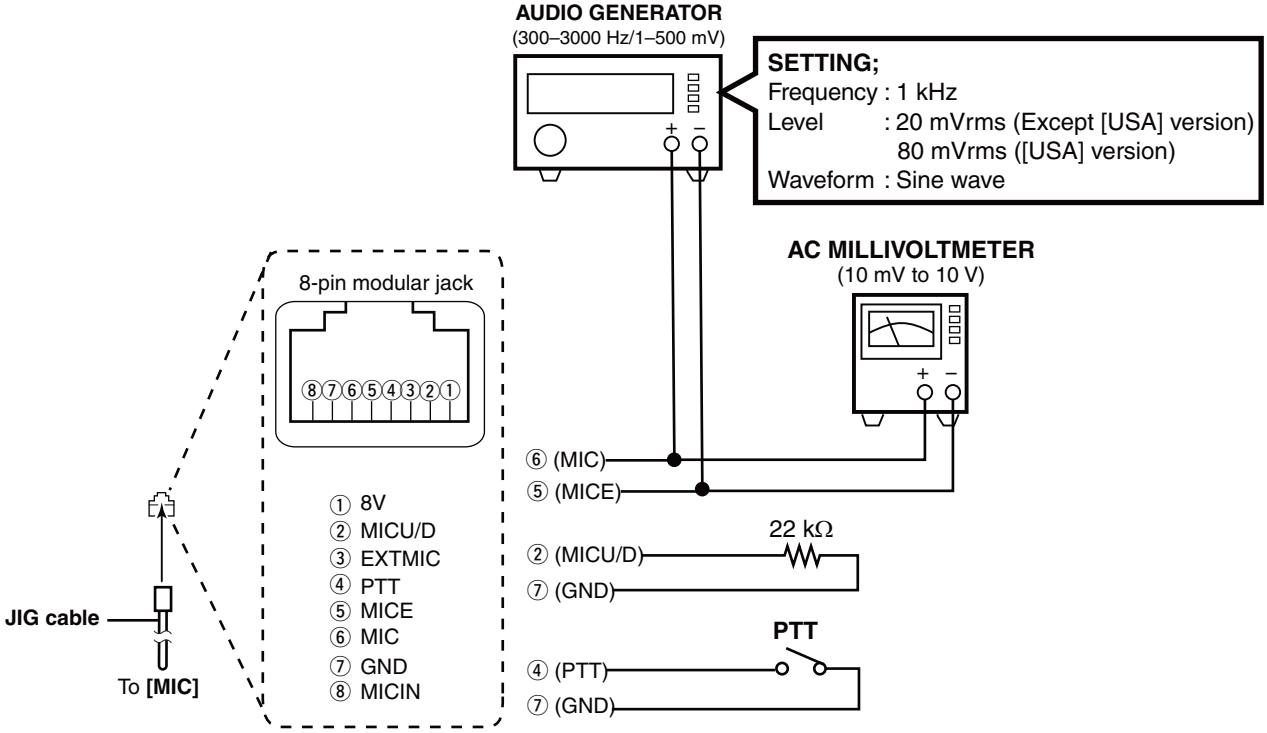

■ CONNECTION

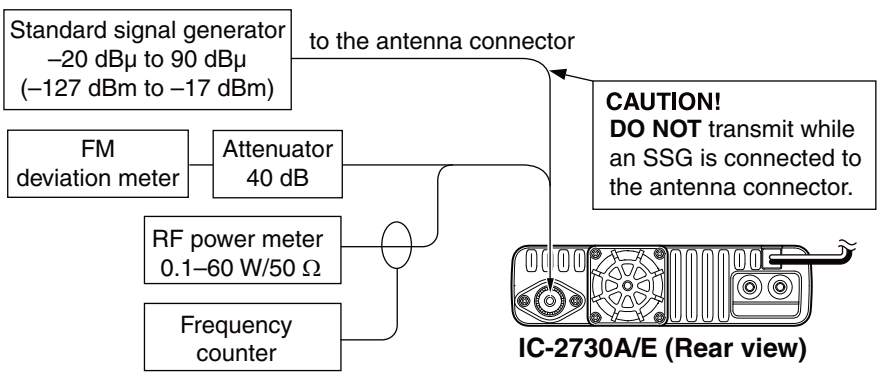

Select an adjustment item using **[MONI]**/**[LOW]**, and then set the adjustment value as specified using **[DIAL]**.

• ENTERING THE ADJUSTMENT MODE

1) Connect the JIG cable to **[MIC]** on the main unit. (See page 5-1.)
2) While holding down both **[MAIN BAND]**, turn ON the power.

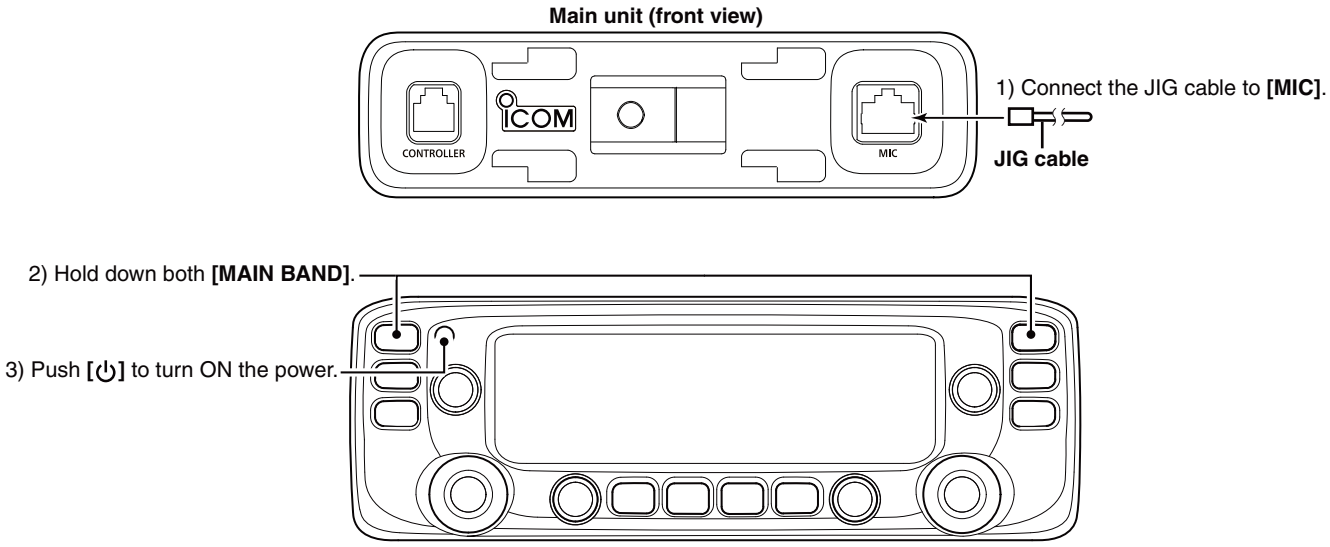

• KEY ASSIGNMENTS FOR THE ADJUSTMENT MODE

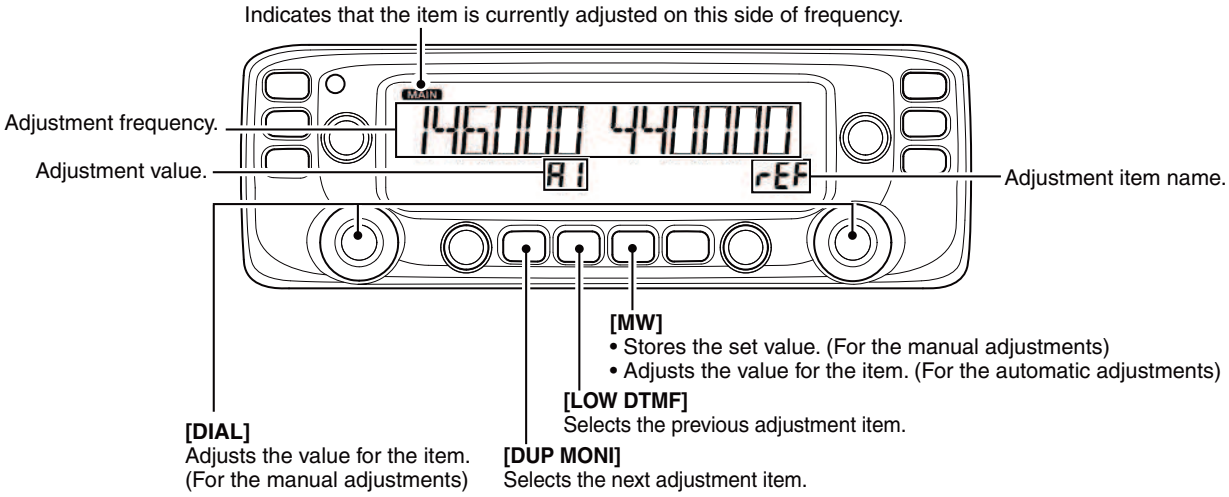

• QUITTING THE ADJUSTMENT MODE

1) Remove the JIG cable from **[MIC]**.
2) Turn OFF the power, and then turn ON again.

5-2 FREQUENCY ADJUSTMENT

Select an adjustment item using **[DUP MONI]**/**[LOW DTMF]**, and then set the adjustment value as specified using **[DIAL]**.

ADJUSTMENT	ADJUSTMENT ITEM		OPERATION	VALUE
REFERENCE FREQUENCY [Left band]	[rEF]	1	1) Connect a power meter or dummy load to the antenna connector. 2) Loosely couple a frequency counter to the antenna connector. 3) While transmitting, adjust the frequency using **[DIAL]**, and then push **[MW]** to store the adjustment value.	146.000 MHz
[Right band]		2		440.000 MHz

5-3 TRANSMIT ADJUSTMENTS

Select an adjustment item using **[DUP MONI]**/**[LOW DTMF]**, and then set the adjustment value as specified using **[DIAL]**.

ADJUSTMENT	ADJUSTMENT ITEM		OPERATION	VALUE
TRANSMIT POWER -VHF- (Hi power) [BAND LOW]	[PL]	1	1) Connect an RF power meter to the antenna connector. 2) While transmitting, adjust the TX power using **[DIAL]**, and then push **[MW]** to store the adjustment value.	50 W
[BAND HIGH]	[PH]	2		
(Mid power) [BAND LOW]	[PL] (MID)	3		15 W (22 W [TPE-01])
[BAND HIGH]	[PH] (MID)	4		
(Low power) [BAND LOW]	[PL] (LOW)	5		5 W
[BAND HIGH]	[PH] (LOW)	6		
-UHF- (Hi power) [BAND LOW]	[PL]	7		50 W
[BAND HIGH]	[PH]	8		
(Mid power) [BAND LOW]	[PL] (MID)	9		15 W (22 W [TPE-01])
[BAND HIGH]	[PH] (MID)	10		
(Low power) [BAND LOW]	[PL] (LOW)	11		5 W
[BAND HIGH]	[PH] (LOW)	12		
DEVIATION -LEFT BAND- (BAND LOW) [FM]	[dE]	1	1) Connect a modulation analyzer to the antenna connector through an attenuator, and set it as; HPF: OFF LPF: 20 kHz De-emphasis: OFF Detector: (P-P)/2 2) Connect an audio generator to the JIG cable, and then set it as: Frequency: 1 kHz Level: 20 mVrms (Except [USA] version) 80 mVrms ([USA] version) 3) While transmitting, adjust the deviation using **[DIAL]**, and then push **[MW]** to store the adjustment value.	±4.2 kHz
[FM-N]	[dE] (NAR)	2		±2.1 kHz
(BAND CENTER) [FM]	[dE]	3		±4.2 kHz
[FM-N]	[dE] (NAR)	4		±2.1 kHz
(BAND HIGH) [FM]	[dE]	5		±4.2 kHz
[FM-N]	[dE] (NAR)	6		±2.1 kHz
-RIGHT BAND- (BAND LOW) [FM]	[dE]	7		±4.2 kHz
[FM-N]	[dE] (NAR)	8		±2.1 kHz
(BAND CENTER) [FM]	[dE]	9		±4.2 kHz
[FM-N]	[dE] (NAR)	10		±2.1 kHz
(BAND HIGH) [FM]	[dE]	11		±4.2 kHz
[FM-N]	[dE] (NAR)	12		±2.1 kHz

Select an adjustment item using **[DUP MONI]**/**[LOW DTMF]**, and then set the adjustment value as specified using **[DIAL]**.

<table>
<tr><th>ADJUSTMENT</th><th>ADJUSTMENT ITEM</th><th colspan="2">OPERATION</th><th>VALUE</th></tr>
<tr><td>MODULATION BALANCE
-LEFT BAND-
(BAND LOW)
[FM]</td><td>[rdE]</td><td>1</td><td rowspan="12">1) Connect a modulation analyzer to the antenna connector through an attenuator, and then set it as;
HPF: OFF
LPF: 20 kHz
De-emphasis: OFF
Detector: (P-P)/2
2) No audio signal is applied to the JIG cable.
3) While transmitting, adjust the modulation balance using [DIAL], and then push [MW] to store the adjustment value.</td><td>±4.0 kHz</td></tr>
<tr><td>[FM-N]</td><td>[rdE] (NAR)</td><td>2</td><td>±2.0 kHz</td></tr>
<tr><td>(BAND CENTER)
[FM]</td><td>[rdE]</td><td>3</td><td>±4.0 kHz</td></tr>
<tr><td>[FM-N]</td><td>[rdE] (NAR)</td><td>4</td><td>±2.0 kHz</td></tr>
<tr><td>(BAND HIGH)
[FM]</td><td>[rdE]</td><td>5</td><td>±4.0 kHz</td></tr>
<tr><td>[FM-N]</td><td>[rdE] (NAR)</td><td>6</td><td>±2.0 kHz</td></tr>
<tr><td>-RIGHT BAND-
(BAND LOW)
[FM]</td><td>[rdE]</td><td>7</td><td>±4.0 kHz</td></tr>
<tr><td>[FM-N]</td><td>[rdE] (NAR)</td><td>8</td><td>±2.0 kHz</td></tr>
<tr><td>(BAND CENTER)
[FM]</td><td>[rdE]</td><td>9</td><td>±4.0 kHz</td></tr>
<tr><td>[FM-N]</td><td>[rdE] (NAR)</td><td>10</td><td>±2.0 kHz</td></tr>
<tr><td>(BAND HIGH)
[FM]</td><td>[rdE]</td><td>11</td><td>±4.0 kHz</td></tr>
<tr><td>[FM-N]</td><td>[rdE] (NAR)</td><td>12</td><td>±2.0 kHz</td></tr>
<tr><td>TONE DEVIATION
-CTCSS-
[Left band]</td><td rowspan="2">[CtC]</td><td>1</td><td rowspan="4">1) Connect a modulation analyzer to the antenna connector through an attenuator, and then set it as;
HPF: OFF
LPF: 20 kHz
De-emphasis: OFF
Detector: (P-P)/2
2) No audio signal is applied to the JIG cable.
3) While transmitting, adjust the tone deviation using [DIAL], and then push [MW] to store the adjustment value.</td><td rowspan="4">±0.75 kHz</td></tr>
<tr><td>[Right band]</td><td>2</td></tr>
<tr><td>-DTCS-
[Left band]</td><td rowspan="2">[dtC]</td><td>3</td></tr>
<tr><td>[Right band]</td><td>4</td></tr>
</table>

5-4 RECEIVE ADJUSTMENTS

1) Select an adjustment item (band) using **[DUP MONI]/[LOW DTMF]**.
2) Set the SSG' frequency as specified, and then push **[MW]** to automatically adjust.

ADJUSTMENT	ADJUSTMENT ITEM		OPERATION	VALUE
RECEIVE SENSITIVITY	**NOTE:** "**RECEIVE SENSITIVITY**" must be adjusted before "**S-METER**." Otherwise, "**S-METER**" will not be adjusted properly.			
-Preparation-	–	1	• Connect an SSG to the antenna connector, and then set it as; Level†: 0 dBμ (–107 dBm) Modulation: None	–
[118.020 MHz] (LEFT BAND)	[bP1]	2	• Set the SSG as: Frequency: 118.020 MHz	Push **[MW]**. (Automatic adjustment)
(RIGHT BAND)		3		
[145.020/146.020 MHz] (LEFT BAND)	[bP2]	4	• Set the SSG as; Frequency: (Set the same frequency displayed on the controller.)	Push **[MW]**. (Automatic adjustment)
(RIGHT BAND)		5		
[173.980 MHz] (LEFT BAND)	[bP3]	6	• Set the SSG as: Frequency: 173.980 MHz	Push **[MW]**. (Automatic adjustment)
(RIGHT BAND)		7		
[375.020 MHz] (LEFT BAND)	[bP4]	8	• Set the SSG as: Frequency: 375.020 MHz	Push **[MW]**. (Automatic adjustment)
(RIGHT BAND)		9		
[420.020 MHz] (LEFT BAND)	[bP5]	10	• Set the SSG as: Frequency: 420.020 MHz	Push **[MW]**. (Automatic adjustment)
(RIGHT BAND)		11		
[449.980 MHz] (LEFT BAND)	[bP6]	12	• Set the SSG as: Frequency: 449.980 MHz	Push **[MW]**. (Automatic adjustment)
(RIGHT BAND)		13		
[450.020 MHz] (LEFT BAND)	[bP7]	14	• Set the SSG as: Frequency: 450.020 MHz	Push **[MW]**. (Automatic adjustment)
(RIGHT BAND)		15		
[500.020 MHz] (LEFT BAND)	[bP8]	16	• Set the SSG as: Frequency: 500.020 MHz	Push **[MW]**. (Automatic adjustment)
(RIGHT BAND)		17		
[549.980 MHz] (LEFT BAND)	[bP9]	18	• Set the SSG as: Frequency: 549.980 MHz	Push **[MW]**. (Automatic adjustment)
(RIGHT BAND)		19		

ADJUSTMENT	ADJUSTMENT ITEM		OPERATION	VALUE
S-METER	**NOTE:** "**RECEIVE SENSITIVITY**" must be adjusted before "**S-METER**." Otherwise, "**S-METER**" will not be adjusted properly.			
	–	1	• Connect an SSG to the antenna connector, and then set it as: Modulation: None	–
-127.020 MHz- **(AM mode)** **[Left band]**	[S11]	2	• Set the SSG as: Frequency: 127.020 MHz Level†: –6 dBµ (–113 dBm)	Push **[MW]**. (Automatic adjustment)
[Right band]	[S11]	3		
[Left band]	[S31]	4	• Set the SSG as: Level†: 0 dBµ (–107 dBm)	
[Right band]	[S31]	5		
[Left band]	[SF1]	6	• Set the SSG as: Level†: +10 dBµ (–97 dBm)	
[Right band]	[SF1]	7		
-145.020/146.020 MHz- **(FM mode)** **[Left band]**	[S12]	8	• Set the SSG as: Frequency: (Set the same frequency displayed on the controller.) Level†: –6 dBµ (–113 dBm)	Push **[MW]**. (Automatic adjustment)
[Right band]	[S12]	9		
[Left band]	[S32]	10	• Set the SSG as: Level†: 0 dBµ (–107 dBm)	
[Right band]	[S32]	11		
[Left band]	[SF2]	12	• Set the SSG as: Level†: +10 dBµ (–97 dBm)	
[Right band]	[SF2]	13		
-387.020 MHz- **(FM mode)** **[Left band]**	[S13]	14	• Set the SSG as: Frequency: 387.020 MHz Level†: –6 dBµ (–113 dBm)	Push **[MW]**. (Automatic adjustment)
[Right band]	[S13]	15		
[Left band]	[S33]	16	• Set the SSG as: Level†: 0 dBµ (–107 dBm)	
[Right band]	[S33]	17		
[Left band]	[SF3]	18	• Set the SSG as: Level†: +10 dBµ (–97 dBm)	
[Right band]	[SF3]	19		
-435.020/445.020 MHz- **(FM mode)** **[Left band]**	[S14]	20	• Set the SSG as: Frequency: (Set the same frequency displayed on the controller.) Level†: –6 dBµ (–113 dBm)	Push **[MW]**. (Automatic adjustment)
[Right band]	[S14]	21		
[Left band]	[S34]	22	• Set the SSG as: Level†: 0 dBµ (–107 dBm)	
[Right band]	[S34]	23		
[Left band]	[SF4]	24	• Set the SSG as: Level†: +10 dBµ (–97 dBm)	
[Right band]	[SF4]	25		
-500.020 MHz- **(FM mode)** **[Left band]**	[S15]	26	• Set the SSG as: Frequency: 500.020 MHz Level†: –6 dBµ (–113 dBm)	Push **[MW]**. (Automatic adjustment)
[Right band]	[S15]	27		
[Left band]	[S35]	28	• Set the SSG as: Level†: 0 dBµ (–107 dBm)	
[Right band]	[S35]	29		
[Left band]	[SF5]	30	• Set the SSG as: Level†: +10 dBµ (–97 dBm)	
[Right band]	[SF5]	31		
-127.020 MHz- **(AM-N mode)** **[Left band]**	[S36] (NAR)	32	• Set the SSG as: Frequency: 127.020 MHz Level†: 0 dBµ (–107 dBm)	Push **[MW]**. (Automatic adjustment)
[Right band]	[S36] (NAR)	33		
-145.020/146.020 MHz- **(FM-N mode)** **[Left band]**	[S37] (NAR)	34	• Set the SSG as: Frequency: (Set the same frequency displayed on the controller.) Level†: 0 dBµ (–107 dBm)	Push **[MW]**. (Automatic adjustment)
[Right band]	[S37] (NAR)	35		
-387.020 MHz- **(FM-N mode)** **[Left band]**	[S38] (NAR)	36	• Set the SSG as: Frequency: 387.020 MHz Level†: 0 dBµ (–107 dBm)	Push **[MW]**. (Automatic adjustment)
[Right band]	[S38] (NAR)	37		

ADJUSTMENT	ADJUSTMENT ITEM		OPERATION	VALUE
-435.020/450.020 MHz- (FM-N mode) [Left band]	[S39] (NAR)	38	• Set the SSG as: Frequency: (Set the same frequency displayed on the controller.) Level†: 0 dBμ (–107 dBm)	Push **[MW]**. (Automatic adjustment)
[Right band]	[S39] (NAR)	39		
-500.020 MHz- (FM-N mode) [Left band]	[S40] (NAR)	40	• Set the SSG as: Frequency: (Set the same frequency displayed on the controller.) Level†: 0 dBμ (–107 dBm)	Push **[MW]**. (Automatic adjustment)
[Right band]	[S40] (NAR)	41		
SQUELCH	**NOTE:** "**RECEIVE SENSITIVITY**" must be adjusted before "**SQUELCH**" and "**S-METER**." Otherwise, "**SQUELCH**" will not be adjusted properly.			
-127.020 MHz- (AM mode) [Left band]	[Sq1]	1	• Connect a 50 Ω dummy load to the antenna connector.	Push **[MW]**. (Automatic adjustment)
[Right band]	[Sq1]	2		
(AM-N mode) [Left band]	[Sq1] (NAR)	3		
[Right band]	[Sq1] (NAR)	4		
-145.020/146.020 MHz- (FM mode) [Left band]	[Sq2]	5		
[Right band]	[Sq2]	6		
(FM-N mode) [Left band]	[Sq2] (NAR)	7		
[Right band]	[Sq2] (NAR)	8		
-387.020 MHz- (FM mode) [Left band]	[Sq3]	9		
[Right band]	[Sq3]	10		
(FM-N mode) [Left band]	[Sq3] (NAR)	11		
[Right band]	[Sq3] (NAR)	12		
-440.020 MHz- (FM mode) [Left band]	[Sq4]	13		
[Right band]	[Sq4]	14		
(FM-N mode) [Left band]	[Sq4] (NAR)	15		
[Right band]	[Sq4] (NAR)	16		
-500.020 MHz- (FM mode) [Left band]	[Sq5]	17		
[Right band]	[Sq5]	18		
(FM-N mode) [Left band]	[Sq5] (NAR)	19		
[Right band]	[Sq5] (NAR)	20		

†: This output level of a standard signal generator (SSG) is indicated in SSG's 50 ohms termination.

SECTION 6 PARTS LIST

[CONTROL UNIT]

REF NO.	PARTS NO.	DESCRIPTION		M.	H/V LOCATION
IC2	1130017740	S.IC	HT16C24/YG-LQFP80	B	87.8/61.6
IC6	1180004490	S.REG	XC6209F332MR-G	B	32.0/29.6
IC7	1180004490	S.REG	XC6209F332MR-G	B	64.9/12.7
IC102	1110007660	S.IC	NJM2746V-TE1-#ZZZB	B	83.3/11.5
Q3	1590004090	S.TRA	LDTC114YET1G <SLVJ>	B	43.4/28.4
Q4	1590004090	S.TRA	LDTC114YET1G <SLVJ>	B	45.7/28.4
Q5	1590004090	S.TRA	LDTC114YET1G <SLVJ>	B	48.1/28.4
Q6	1590004090	S.TRA	LDTC114YET1G <SLVJ>	B	50.6/28.5
Q7	1510001100	S.TRA	2SA1832-GR(TE85RF)	B	74.2/15.4
Q8	1590004090	S.TRA	LDTC114YET1G <SLVJ>	B	76.5/17.5
Q102	1530003990	S.TRA	2SC4738-BL(TE85LF)	B	106.8/28.2
Q103	1590004090	S.TRA	LDTC114YET1G <SLVJ>	B	40.3/27.6
Q104	1590004390	S.TRA	DMG504010R	B	46.1/21.1
D100	1750001810	S.DIO	L1SS400T1G <SLVJ>	B	110.2/26.6
D101	1730002850	S.ZEN	DZ2J047M0L	B	88.0/14.6
D102	1790001930	S.VAR	VC060309A200RP	T	50.9/26.2
D103	1790001930	S.VAR	VC060309A200RP	B	73.3/9.0
D108	1790001850	S.VAR	VC040205X150WP	B	55.0/8.8
R3	7210003731	VAR	R09022N0-FB20B7B503-0004 <EVT>		
R4	7030005120	S.RES	ERJ2GEJ 102 X (1K)	B	67.0/22.3
R7	7210003731	VAR	R09022N0-FB20B7B503-0004 <EVT>		
R8	7030005120	S.RES	ERJ2GEJ 102 X (1K)	B	68.4/22.2
R11	7030005090	S.RES	ERJ2GEJ 104 X (100K)	B	57.7/14.3
R12	7030005090	S.RES	ERJ2GEJ 104 X (100K)	B	59.5/12.2
R13	7030005090	S.RES	ERJ2GEJ 104 X (100K)	B	60.7/13.8
R14	7030005090	S.RES	ERJ2GEJ 104 X (100K)	B	59.3/14.4
R15	7030005120	S.RES	ERJ2GEJ 102 X (1K)	B	70.3/20.9
R16	7030005120	S.RES	ERJ2GEJ 102 X (1K)	B	70.4/20.0
R17	7030007350	S.RES	ERJ2GEJ 393 X (39K)	B	63.7/16.6
R20	7030005120	S.RES	ERJ2GEJ 102 X (1K)	B	61.5/12.0
R27	7030005050	S.RES	ERJ2GEJ 103 X (10K)	B	60.2/11.1
R41	7030007270	S.RES	ERJ2GEJ 151 X (150)	B	50.2/26.9
R42	7030007270	S.RES	ERJ2GEJ 151 X (150)	B	48.6/26.9
R43	7030005000	S.RES	ERJ2GEJ 471 X (470)	B	45.4/26.9
R44	7030005000	S.RES	ERJ2GEJ 471 X (470)	B	43.8/26.9
R45	7030004990	S.RES	ERJ2GEJ 221 X (220)	T	31.9/27.1
R46	7030004990	S.RES	ERJ2GEJ 221 X (220)	T	67.8/25.9
R47	7030004990	S.RES	ERJ2GEJ 221 X (220)	T	110.4/27.1
R48	7030004990	S.RES	ERJ2GEJ 221 X (220)	T	74.2/26.0
R50	7210003731	VAR	R09022N0-FB20B7B503-0004 <EVT>		
R51	7210003731	VAR	R09022N0-FB20B7B503-0004 <EVT>		
R52	7030005040	S.RES	ERJ2GEJ 472 X (4.7K)	B	43.5/19.8
R53	7030005040	S.RES	ERJ2GEJ 472 X (4.7K)	B	44.7/18.9
R54	7030005050	S.RES	ERJ2GEJ 103 X (10K)	B	87.7/13.1
R55	7030005120	S.RES	ERJ2GEJ 102 X (1K)	B	82.0/14.5
R56	7030005090	S.RES	ERJ2GEJ 104 X (100K)	B	83.6/14.0
R57	7030010010	S.RES	ERJ2RKF 334 X (330K)	B	84.9/14.2
R58	7030012270	S.RES	ERJ2RKD 1203X (120K)	B	87.9/12.0
R59	7030005950	S.RES	RR0510P-123-D (12K)	B	89.3/12.5
R60	7030005090	S.RES	ERJ2GEJ 104 X (100K)	B	78.5/12.5
R61	7030007340	S.RES	ERJ2GEJ 153 X (15K)	B	79.9/9.6
R62	7030005110	S.RES	ERJ2GEJ 224 X (220K)	B	77.5/10.7
R63	7030005170	S.RES	ERJ2GEJ 474 X (470K)	B	87.7/10.8
R64	7030005090	S.RES	ERJ2GEJ 104 X (100K)	B	76.2/11.9
R70	7030005090	S.RES	ERJ2GEJ 104 X (100K)	B	108.3/28.6
R71	7030007290	S.RES	ERJ2GEJ 222 X (2.2K)	B	109.2/28.6
R72	7030005220	S.RES	ERJ2GEJ 223 X (22K)	B	108.5/27.4
R73	7030005050	S.RES	ERJ2GEJ 103 X (10K)	B	105.2/28.1
R74	7030005120	S.RES	ERJ2GEJ 102 X (1K)	B	104.0/31.5
R75	7030005040	S.RES	ERJ2GEJ 472 X (4.7K)	B	111.3/31.4
R76	7030005120	S.RES	ERJ2GEJ 102 X (1K)	B	105.2/31.0
R77	7030005090	S.RES	ERJ2GEJ 104 X (100K)	B	110.4/31.0
R84	7030010040	S.RES	ERJ2GEJ-JPW	B	95.8/23.3
R85	7030005040	S.RES	ERJ2GEJ 472 X (4.7K)	B	93.2/21.0
R86	7030005040	S.RES	ERJ2GEJ 472 X (4.7K)	B	93.6/20.1
R91	7030005120	S.RES	ERJ2GEJ 102 X (1K)	B	45.7/23.9
R92	7030005050	S.RES	ERJ2GEJ 103 X (10K)	B	45.7/22.9
R93	7030005050	S.RES	ERJ2GEJ 103 X (10K)	B	48.2/20.9
R94	7030005240	S.RES	ERJ2GEJ 473 X (47K)	B	48.2/22.0
R95	7030005050	S.RES	ERJ2GEJ 103 X (10K)	B	46.9/23.4
R96	7030005040	S.RES	ERJ2GEJ 472 X (4.7K)	B	46.6/18.9
R97	7030005040	S.RES	ERJ2GEJ 472 X (4.7K)	B	44.4/21.1
R103	7030004990	S.RES	ERJ2GEJ 221 X (220)	B	41.4/26.2
R104	7030009140	S.RES	ERJ2GEJ 272 X (2.7K)	T	129.3/34.9
R105	7030009140	S.RES	ERJ2GEJ 272 X (2.7K)	T	22.1/36.2
R106	7030005120	S.RES	ERJ2GEJ 102 X (1K)	B	74.6/10.3
R124	7030005090	S.RES	ERJ2GEJ 104 X (100K)	B	53.1/15.0
R125	7030005040	S.RES	ERJ2GEJ 472 X (4.7K)	B	83.7/14.9
R126	7030005240	S.RES	ERJ2GEJ 473 X (47K)	B	72.6/15.4
R127	7030007290	S.RES	ERJ2GEJ 222 X (2.2K)	B	74.3/17.4
C1	4030016790	S.CER	C1005 JB 1E 103K-T	B	62.7/13.0
C3	4030016930	S.CER	C1005 JB 1A 104K-T	B	68.5/23.6
C4	4030016930	S.CER	C1005 JB 1A 104K-T	B	69.7/21.8
C7	4030017420	S.CER	C1005 CH 1H 470J-T	T	18.4/15.2
C9	4030017420	S.CER	C1005 CH 1H 470J-T	T	22.4/15.2
C15	4030016930	S.CER	C1005 JB 1A 104K-T	B	69.1/20.3

[CONTROL UNIT]

REF NO.	PARTS NO.	DESCRIPTION		M.	H/V LOCATION
C16	4030016930	S.CER	C1005 JB 1A 104K-T	B	68.2/19.8
C17	4030016930	S.CER	C1005 JB 1A 104K-T	B	67.0/18.7
C38	4030016930	S.CER	C1005 JB 1A 104K-T	B	53.2/16.0
C39	4030016790	S.CER	C1005 JB 1E 103K-T	B	59.7/8.4
C40	4030020000	S.CER	C1005 JB 1A 105K-T	B	34.2/28.3
C41	4030016930	S.CER	C1005 JB 1A 104K-T	B	57.6/9.7
C42	4030019560	S.CER	GRM21BB31C106KE15L	B	32.0/26.5
C62	4030020000	S.CER	C1005 JB 1A 105K-T	B	78.4/9.0
C64	4030020000	S.CER	C1005 JB 1A 105K-T	B	76.6/10.7
C65	4030017460	S.CER	C1005 JB 1H 102K-T	B	89.1/10.3
C66	4030016930	S.CER	C1005 JB 1A 104K-T	B	89.1/11.2
C67	4030018860	S.CER	C1005 JB 0J 105K-T	B	78.6/13.4
C68	4030017460	S.CER	C1005 JB 1H 102K-T	B	81.0/8.6
C72	4030017460	S.CER	C1005 JB 1H 102K-T	B	109.5/31.4
C73	4030017460	S.CER	C1005 JB 1H 102K-T	B	107.7/31.0
C81	4030016930	S.CER	C1005 JB 1A 104K-T	B	96.3/22.0
C82	4030016930	S.CER	C1005 JB 1A 104K-T	B	94.5/19.2
C101	4030016930	S.CER	C1005 JB 1A 104K-T	B	38.6/27.8
C102	4030018860	S.CER	C1005 JB 0J 105K-T	B	65.4/16.5
C103	4030019560	S.CER	GRM21BB31C106KE15L	B	80.5/15.1
C104	4030016930	S.CER	C1005 JB 1A 104K-T	B	76.6/15.1
C105	4030016930	S.CER	C1005 JB 1A 104K-T	T	17.0/15.3
C106	4030017460	S.CER	C1005 JB 1H 102K-T	T	27.8/2.2
C107	4030017460	S.CER	C1005 JB 1H 102K-T	T	106.1/9.2
C108	4030020000	S.CER	C1005 JB 1A 105K-T	B	67.1/13.3
C109	4030018860	S.CER	C1005 JB 0J 105K-T	B	56.9/15.4
J6	6450002420	CON	9691-6614 <SJC>		
J101	6510023110	CON	3008L-8P8C <KIN>		
DS1	5030003920	LCD	JIC-LTNN013601-01 <RYOYO>		
DS2	5040003890	S.LED	B1931TX--05P-000412 <KOU>	T	109.6/25.5
DS3	5040003890	S.LED	B1931TX--05P-000412 <KOU>	T	32.6/25.5
DS4	5040003890	S.LED	B1931TX--05P-000412 <KOU>	T	98.6/25.5
DS5	5040003890	S.LED	B1931TX--05P-000412 <KOU>	T	43.6/25.5
DS6	5040003890	S.LED	B1931TX--05P-000412 <KOU>	T	65.6/25.5
DS7	5040003890	S.LED	B1931TX--05P-000412 <KOU>	T	76.6/25.5
DS8	5040003890	S.LED	B1931TX--05P-000412 <KOU>	T	54.6/25.5
DS9	5040003890	S.LED	B1931TX--05P-000412 <KOU>	T	87.6/25.5
DS10	5040003890	S.LED	B1931TX--05P-000412 <KOU>	T	136.0/26.5
DS13	5040003890	S.LED	B1931TX--05P-000412 <KOU>	T	136.0/34.3
DS14	5040003890	S.LED	B1931TX--05P-000412 <KOU>	T	6.2/34.3
DS15	5040003890	S.LED	B1931TX--05P-000412 <KOU>	T	82.3/5.2
DS16	5040003890	S.LED	B1931TX--05P-000412 <KOU>	T	6.2/26.5
DS17	5040003890	S.LED	B1931TX--05P-000412 <KOU>	T	59.9/5.2
S14	2250000790	ENC	EC12E24204A9		
S15	2250000790	ENC	EC12E24204A9		
EP2	6910018460	S.BEA	MMZ1005Y102C-T	B	55.7/15.0
EP3	6910018460	S.BEA	MMZ1005Y102C-T	T	29.3/7.0
EP4	6910012350	S.BEA	MMZ1608Y 102BT	T	14.0/16.7
EP5	6910018460	S.BEA	MMZ1005Y102C-T	T	19.4/19.1
EP6	6910018460	S.BEA	MMZ1005Y102C-T	T	19.4/18.1
EP7	6910012350	S.BEA	MMZ1608Y 102BT	T	18.4/16.6
EP8	6910018460	S.BEA	MMZ1005Y102C-T	T	28.5/3.1
EP15	8930091410	LCD	SRCN-3598-SP-N-W (SHJ)		
EP100	6910018460	S.BEA	MMZ1005Y102C-T	T	123.6/19.4
EP101	6910018460	S.BEA	MMZ1005Y102C-T	T	123.7/21.3
EP102	6910018460	S.BEA	MMZ1005Y102C-T	T	123.6/20.3
EP103	6910018460	S.BEA	MMZ1005Y102C-T	T	123.4/18.4
EP104	6910018460	S.BEA	MMZ1005Y102C-T	T	108.0/7.2
EP105	6910018460	S.BEA	MMZ1005Y102C-T	T	113.5/8.7
EP106	6910018460	S.BEA	MMZ1005Y102C-T	T	126.9/13.7
EP107	6910018460	S.BEA	MMZ1005Y102C-T	T	123.4/17.4
EP109	6910018460	S.BEA	MMZ1005Y102C-T	B	92.9/19.2
EP110	6910018460	S.BEA	MMZ1005Y102C-T	B	66.9/14.9

Eqv.= This component is equivalent to the REF No. component listed above, and may be substituted on parts orders and repairs.

M.=Mounted side (T: Mounted on the Top side, B: Mounted on the Bottom side)
S.=Surface mount

[MAIN UNIT]

REF NO.	PARTS NO.	DESCRIPTION		M.	H/V LOCATION
IC1	1130016460	S.IC	R2A20169SA	B	59.0/21.0
IC2	1110008910	S.IC	NJM2904CV-TE1-#HMZR	B	89.6/28.9
IC3	1150002423	IC	RA60H1317M1A-222		
IC4	1150002400	IC	RA60H4047M1-121		
IC100	1130015760	S.IC	TC74VHC4066AFK(EK)	T	118.3/13.3
IC101	1110007660	S.IC	NJM2746V-TE1-#ZZZB	T	31.5/8.4
IC102	1110007550	S.IC	R2A20178NP	T	86.3/12.6
IC103	1110008830	S.IC	NJU7058V-TE2-#ZMZH	T	97.8/20.1
IC104	1130015760	S.IC	TC74VHC4066AFK(EK)	B	100.5/22.8
IC105	1110003091	IC	LA4425A-E		
IC106	1110003091	IC	LA4425A-E		
IC107	1110006490	S.IC	LMV321IDCKR	T	115.2/70.9
IC108	1130013010	S.IC	SN74AHC1G08DCK3	T	125.4/70.6
IC109	1130015760	S.IC	TC74VHC4066AFK(EK)	T	120.2/74.4
IC110	1110008680	S.IC	NJU72341V-TE2-#UZZH	T	108.2/74.8
IC111	1130015760	S.IC	TC74VHC4066AFK(EK)	T	99.7/46.7
IC112	1110008830	S.IC	NJU7058V-TE2-#ZMZH	T	105.5/12.8
IC119	1130015760	S.IC	TC74VHC4066AFK(EK)	B	98.6/35.1
IC120	1110007300	S.IC	NJM2552V-TE1-#ZZZB	T	12.8/30.0
IC121	1110007300	S.IC	NJM2552V-TE1-#ZZZB	T	53.8/30.0
IC122	1110006490	S.IC	LMV321IDCKR	T	120.0/31.7
IC123	1110006490	S.IC	LMV321IDCKR	T	115.4/34.5
IC201	1130017460	S.IC	AK1542A-L	B	72.4/20.8
IC202	1130007021	S.IC	TC7S66FU(TE85LF)	B	80.2/23.9
IC205	1130015760	S.IC	TC74VHC4066AFK(EK)	T	75.7/13.5
IC206	1130017460	S.IC	AK1542A-L	B	31.3/20.8
IC207	1130007021	S.IC	TC7S66FU(TE85LF)	B	40.5/24.9
IC300	1140016890	S.IC	R4F20335RDFE	B	121.0/49.5
IC301	1130017770	S.IC	R1EX24256BSAS0I	T	131.4/45.5
IC306	1180004490	S.REG	XC6209F332MR-G	B	135.0/18.1
IC307	1110006490	S.IC	LMV321IDCKR	T	124.2/25.6
IC308	1110007820	S.IC	S-80929CNPF-G8ZTFG *0	T	135.0/57.3
IC310	1190004090	S.IC	INA199B1DCKR	B	114.3/72.2
IC311	1180004490	S.REG	XC6209F332MR-G	B	113.2/67.1
IC312	1130014260	S.IC	SN74LVC2GU04DCKR	T	120.1/67.4
IC313	1180003500	S.REG	NJM7808DL1A-TE1-#FZZB	B	113.2/100.2
IC314	1180004490	S.REG	XC6209F332MR-G	T	97.8/70.7
IC315	1130011760	S.IC	CD4094BPWR	T	49.1/8.9
IC316	1130011760	S.IC	CD4094BPWR	T	55.7/8.9
IC317	1130011760	S.IC	CD4094BPWR	T	42.5/8.9
IC319	1180004430	S.REG	XC6209F502MR-G	T	94.4/70.7
IC320	1110007620	S.IC	NJU7704F3-42A-TE1-#ZZZB	B	119.4/77.1
IC321	1180004680	S.REG	XC6701D802JR-G	B	98.4/100.2
IC324	1110007620	S.IC	NJU7704F3-42A-TE1-#ZZZB	B	118.8/73.3
IC325	1180003500	S.REG	NJM7808DL1A-TE1-#FZZB	B	105.8/100.2
Q1	1590004070	S.TRA	LDTC144EET1G <SLVJ>	T	20.8/90.8
Q2	1590004070	S.TRA	LDTC144EET1G <SLVJ>	T	18.5/83.3
Q5	1590004070	S.TRA	LDTC144EET1G <SLVJ>	T	45.5/89.2
Q6	1590004070	S.TRA	LDTC144EET1G <SLVJ>	T	45.5/86.3
Q10	1590005220	S.TRA	LDTA114YET1G <SLVJ>	T	18.4/91.3
Q11	1590005220	S.TRA	LDTA114YET1G <SLVJ>	T	20.8/82.8
Q14	1590005220	S.TRA	LDTA114YET1G <SLVJ>	T	47.8/88.7
Q15	1590005220	S.TRA	LDTA114YET1G <SLVJ>	T	47.8/85.8
Q17	1580000731	S.FET	3SK293(TE85LF)	T	14.5/93.8
Q18	1580000731	S.FET	3SK293(TE85LF)	T	30.5/76.5
Q19	1580000731	S.FET	3SK293(TE85LF)	T	56.6/83.8
Q20	1580000731	S.FET	3SK293(TE85LF)	T	72.5/87.5
Q21	1530003990	S.TRA	2SC4738-BL(TE85LF)	T	78.3/68.5
Q22	1530003990	S.TRA	2SC4738-BL(TE85LF)	T	78.2/71.3
Q23	1580000731	S.FET	3SK293(TE85LF)	T	27.8/101.9
Q24	1580000731	S.FET	3SK293(TE85LF)	T	64.7/107.7
Q27	1590004090	S.TRA	LDTC114YET1G <SLVJ>	T	91.1/47.1
Q28	1510000581	S.TRA	2SA1362-GR(TE85RF)	T	88.1/45.7
Q29	1530003990	S.TRA	2SC4738-BL(TE85LF)	T	97.5/112.2
Q30	1520000910	S.TRA	2SB1132L-R-AB3-R <SLVJ>	T	98.4/116.1
Q32	1590004090	S.TRA	LDTC114YET1G <SLVJ>	T	47.8/51.0
Q34	1510000581	S.TRA	2SA1362-GR(TE85RF)	T	44.7/49.8
Q36	1530004460	S.TRA	MT3S20TU(TE85L)	B	79.6/40.2
Q37	1530003321	S.TRA	2SC5108-Y(TE85RF)	B	29.9/36.5
Q38	1530003321	S.TRA	2SC5108-Y(TE85RF)	B	35.0/41.1
Q40	1530004100	S.TRA	MT3S20P(TE12LF)	B	87.5/46.5
Q41	1530004100	S.TRA	MT3S20P(TE12LF)	B	44.0/46.5
Q46	1590004050	S.TRA	LDTA144EET1G <SLVJ>	B	83.7/61.2
Q48	1590004050	S.TRA	LDTA144EET1G <SLVJ>	B	84.1/57.7
Q100	1590004070	S.TRA	LDTC144EET1G <SLVJ>	B	116.5/14.3
Q102	1530003990	S.TRA	2SC4738-BL(TE85LF)	T	24.4/13.3
Q104	1560002190	S.FET	RUM002N02T2L	T	128.3/79.4
Q105	1560002190	S.FET	RUM002N02T2L	T	125.9/76.4
Q106	1560002190	S.FET	RUM002N02T2L	B	132.0/93.0
Q112	1590004590	S.TRA	DMC506010R	T	105.0/59.4
Q113	1590004590	S.TRA	DMC506010R	T	97.8/59.4
Q117	1590004070	S.TRA	LDTC144EET1G <SLVJ>	T	23.3/17.8
Q118	1590004070	S.TRA	LDTC144EET1G <SLVJ>	T	64.0/16.4
Q119	1590004310	S.TRA	LDTA114EET1G <SLVJ>	T	19.9/18.8
Q120	1590004310	S.TRA	LDTA114EET1G <SLVJ>	T	61.5/19.0
Q121	1590004070	S.TRA	LDTC144EET1G <SLVJ>	T	23.3/19.8
Q122	1590004070	S.TRA	LDTC144EET1G <SLVJ>	T	64.0/18.4
Q123	1590004050	S.TRA	LDTA144EET1G <SLVJ>	T	16.3/19.1
Q124	1590004050	S.TRA	LDTA144EET1G <SLVJ>	T	57.2/19.1
Q125	1590004390	S.TRA	DMG504010R	T	105.7/33.5
Q126	1590004390	S.TRA	DMG504010R	T	105.7/40.0
Q127	1590004070	S.TRA	LDTC144EET1G <SLVJ>	T	20.4/24.0
Q128	1590004070	S.TRA	LDTC144EET1G <SLVJ>	T	61.3/24.0
Q129	1590004310	S.TRA	LDTA114EET1G <SLVJ>	T	21.0/26.0
Q130	1590004310	S.TRA	LDTA114EET1G <SLVJ>	T	97.8/36.9
Q131	1590004070	S.TRA	LDTC144EET1G <SLVJ>	B	10.6/39.2
Q132	1590004070	S.TRA	LDTC144EET1G <SLVJ>	B	51.5/39.2
Q133	1530003990	S.TRA	2SC4738-BL(TE85LF)	B	12.7/40.8
Q134	1530003990	S.TRA	2SC4738-BL(TE85LF)	B	53.6/40.8
Q137	1530002601	S.TRA	2SC4215-O(TE85RF)	T	10.4/42.3
Q138	1530002601	S.TRA	2SC4215-O(TE85RF)	T	51.5/42.3
Q139	1590004090	S.TRA	LDTC114YET1G <SLVJ>	T	106.5/54.4
Q140	1590004090	S.TRA	LDTC114YET1G <SLVJ>	T	99.3/54.5

[MAIN UNIT]

REF NO.	PARTS NO.	DESCRIPTION		M.	H/V LOCATION
Q141	1590004050	S.TRA	LDTA144EET1G <SLVJ>	T	19.8/21.6
Q142	1590004050	S.TRA	LDTA144EET1G <SLVJ>	T	60.8/21.6
Q143	1580000731	S.FET	3SK293(TE85LF)	T	20.8/68.6
Q144	1580000731	S.FET	3SK293(TE85LF)	T	14.0/72.5
Q145	1580000731	S.FET	3SK293(TE85LF)	T	60.5/69.8
Q146	1580000731	S.FET	3SK293(TE85LF)	T	55.3/69.9
Q147	1590004070	S.TRA	LDTC144EET1G <SLVJ>	T	64.0/20.5
Q148	1590004070	S.TRA	LDTC144EET1G <SLVJ>	T	23.3/21.9
Q149	1590004070	S.TRA	LDTC144EET1G <SLVJ>	T	113.0/6.9
Q150	1590004070	S.TRA	LDTC144EET1G <SLVJ>	B	114.1/14.3
Q151	1590004070	S.TRA	LDTC144EET1G <SLVJ>	T	117.1/20.1
Q152	1590004070	S.TRA	LDTC144EET1G <SLVJ>	T	119.2/20.1
Q153	1530003990	S.TRA	2SC4738-BL(TE85LF)	B	106.2/59.8
Q200	1530003990	S.TRA	2SC4738-BL(TE85LF)	B	69.0/24.3
Q201	1560000541	S.FET	2SK880-Y(T5RICOMF)	B	87.1/22.2
Q202	1590004070	S.TRA	LDTC144EET1G <SLVJ>	B	87.8/24.5
Q205	1560002190	S.FET	RUM002N02T2L	T	89.7/30.2
Q206	1530003990	S.TRA	2SC4738-BL(TE85LF)	B	84.4/37.8
Q207	1560002190	S.FET	RUM002N02T2L	B	83.3/32.0
Q208	1590004090	S.TRA	LDTC114YET1G <SLVJ>	B	87.3/34.7
Q209	1590004090	S.TRA	LDTC114YET1G <SLVJ>	B	87.3/32.0
Q210	1530003582	S.TRA	2SC5231A-8-TL-E	T	86.4/35.2
Q211	1530003582	S.TRA	2SC5231A-8-TL-E	T	78.7/29.5
Q212	1590004580	S.TRA	DMA501010R	B	83.9/34.8
Q213	1530003321	S.TRA	2SC5108-Y(TE85RF)	T	74.6/30.5
Q214	1530003321	S.TRA	2SC5108-Y(TE85RF)	T	88.1/39.3
Q215	1530003321	S.TRA	2SC5108-Y(TE85RF)	T	78.6/35.4
Q220	1530003990	S.TRA	2SC4738-BL(TE85LF)	B	28.0/24.0
Q221	1560000541	S.FET	2SK880-Y(T5RICOMF)	B	44.9/24.3
Q222	1590004070	S.TRA	LDTC144EET1G <SLVJ>	B	44.0/27.5
Q226	1530003990	S.TRA	2SC4738-BL(TE85LF)	B	40.6/34.1
Q227	1560002190	S.FET	RUM002N02T2L	T	46.0/33.3
Q228	1560002190	S.FET	RUM002N02T2L	T	37.9/34.9
Q229	1590004090	S.TRA	LDTC114YET1G <SLVJ>	B	45.2/33.2
Q230	1590004090	S.TRA	LDTC114YET1G <SLVJ>	B	45.2/31.2
Q231	1590004580	S.TRA	DMA501010R	B	40.8/31.4
Q232	1530003582	S.TRA	2SC5231A-8-TL-E	T	42.0/38.4
Q233	1530003582	S.TRA	2SC5231A-8-TL-E	T	33.0/29.0
Q234	1530003321	S.TRA	2SC5108-Y(TE85RF)	T	28.9/32.1
Q235	1530003321	S.TRA	2SC5108-Y(TE85RF)	T	37.3/38.4
Q236	1530003321	S.TRA	2SC5108-Y(TE85RF)	T	32.8/34.9
Q238	1530003321	S.TRA	2SC5108-Y(TE85RF)	T	25.0/48.8
Q240	1530003321	S.TRA	2SC5108-Y(TE85RF)	T	65.8/48.8
Q301	1590004090	S.TRA	LDTC114YET1G <SLVJ>	T	102.4/105.6
Q302	1520000910	S.TRA	2SB1132L-R-AB3-R <SLVJ>	T	106.1/100.5
Q304	1510001100	S.TRA	2SA1832-GR(TE85RF)	T	123.8/66.7
Q305	1530003990	S.TRA	2SC4738-BL(TE85LF)	T	128.9/67.1
Q306	1520000910	S.TRA	2SB1132L-R-AB3-R <SLVJ>	T	114.8/100.6
Q307	1590004390	S.TRA	DMG504010R	T	113.3/48.3
Q308	1590005220	S.TRA	LDTA114YET1G <SLVJ>	T	104.7/105.1
D1	1750002170	S.DIO	DB2S31400L	T	54.0/88.4
D2	1750002170	S.DIO	DB2S31400L	T	17.3/95.6
D3	1750002170	S.DIO	DB2S31400L	T	69.1/88.4
D4	1750002170	S.DIO	DB2S31400L	T	27.1/79.8
D11	1720000701	S.VAR	1SV305(TPL3F)	T	13.6/83.2
D12	1720000701	S.VAR	1SV305(TPL3F)	T	41.3/68.7
D15	1720000701	S.VAR	1SV305(TPL3F)	T	13.6/85.9
D16	1720000701	S.VAR	1SV305(TPL3F)	T	36.6/69.3
D19	1720000701	S.VAR	1SV305(TPL3F)	B	42.4/62.6
D20	1720000701	S.VAR	1SV305(TPL3F)	T	71.6/82.9
D21	1720000701	S.VAR	1SV305(TPL3F)	T	10.0/104.6
D22	1720000701	S.VAR	1SV305(TPL3F)	T	29.7/85.9
D23	1720000701	S.VAR	1SV305(TPL3F)	T	13.7/101.6
D24	1720000701	S.VAR	1SV305(TPL3F)	T	27.1/85.9
D25	1720000701	S.VAR	1SV305(TPL3F)	T	12.6/104.6
D26	1720000701	S.VAR	1SV305(TPL3F)	T	27.1/90.4
D27	1720000701	S.VAR	1SV305(TPL3F)	T	57.3/96.1
D28	1720000701	S.VAR	1SV305(TPL3F)	T	73.8/97.6
D29	1720000701	S.VAR	1SV305(TPL3F)	T	11.1/101.6
D30	1720000701	S.VAR	1SV305(TPL3F)	T	29.7/90.4
D31	1750002570	S.DIO	BAP50-04215 <RYO>	T	23.4/107.1
D32	1750002570	S.DIO	BAP50-04215 <RYO>	T	30.0/96.5
D33	1750002570	S.DIO	BAP50-04215 <RYO>	T	56.2/101.9
D34	1750002570	S.DIO	BAP50-04215 <RYO>	T	71.2/103.7
D35	1750002170	S.DIO	DB2S31400L	B	29.0/106.0
D36	1750002170	S.DIO	DB2S31400L	B	30.6/105.0
D37	1750002170	S.DIO	DB2S31400L	T	60.6/110.2
D38	1750002170	S.DIO	DB2S31400L	T	60.6/109.0
D49	1750001970	S.ZEN	DZ2J082M0L	T	99.5/111.7
D50	1790001621	S.DIO	1SV308(TPL3F)	T	65.7/51.3
D53	1750001810	S.DIO	L1SS400T1G <SLVJ>	B	88.5/43.4
D55	1750001810	S.DIO	L1SS400T1G <SLVJ>	B	43.0/43.4
D59	1750001820	S.DIO	LRB706F-40T1G <SLVJ>	B	79.6/103.3
D62	1750001820	S.DIO	LRB706F-40T1G <SLVJ>	B	42.1/80.5
D63	1750001820	S.DIO	LRB706F-40T1G <SLVJ>	B	74.5/102.5
D66	1750002190	S.DIO	JDP2S12CR(TE85LQ)	B	79.2/118.0
D67	1750001820	S.DIO	LRB706F-40T1G <SLVJ>	B	31.5/101.9
D68	1750002190	S.DIO	JDP2S12CR(TE85LQ)	B	44.3/106.2
D69	1790001621	S.DIO	1SV308(TPL3F)	B	71.7/110.3
D70	1790001621	S.DIO	1SV308(TPL3F)	B	72.9/110.3
D71	1790001621	S.DIO	1SV308(TPL3F)	B	74.1/110.3
D73	1750002190	S.DIO	JDP2S12CR(TE85LQ)	B	34.3/107.9
D75	1790001621	S.DIO	1SV308(TPL3F)	T	34.0/114.1
D77	1790001621	S.DIO	1SV308(TPL3F)	T	76.3/110.9
D79	1750001810	S.DIO	L1SS400T1G <SLVJ>	T	35.2/108.9
D81	1750001810	S.DIO	L1SS400T1G <SLVJ>	T	76.3/109.6
D84	1750002190	S.DIO	JDP2S12CR(TE85LQ)	B	46.4/106.3
D85	1720000701	S.VAR	1SV305(TPL3F)	T	57.3/93.0
D86	1720000701	S.VAR	1SV305(TPL3F)	B	39.5/62.6
D87	1720000701	S.VAR	1SV305(TPL3F)	T	71.6/81.6
D88	1720000701	S.VAR	1SV305(TPL3F)	T	73.8/96.3
D89	1720000701	S.VAR	1SV305(TPL3F)	T	11.1/86.2
D90	1720000701	S.VAR	1SV305(TPL3F)	T	11.1/83.2

Eqv.= This component is equivalent to the REF No. component listed above, and may be substituted on parts orders and repairs.

M.=Mounted side (T: Mounted on the Top side, B: Mounted on the Bottom side)
S.=Surface mount

[MAIN UNIT]

REF NO.	PARTS NO.	DESCRIPTION	M.	H/V LOCATION
D91	1720000701	S.VAR 1SV305(TPL3F)	T	42.1/67.0
D92	1720000701	S.VAR 1SV305(TPL3F)	T	36.6/66.7
D100	1750001810	S.DIO L1SS400T1G <SLVJ>	T	20.5/13.1
D101	1730002850	S.ZEN DZ2J047M0L	T	30.5/14.0
D105	1750002020	S.DIO DA2S10100L	T	15.2/23.2
D106	1750002020	S.DIO DA2S10100L	T	12.7/23.2
D107	1750002020	S.DIO DA2S10100L	T	56.2/23.2
D108	1750002020	S.DIO DA2S10100L	T	53.7/23.2
D109	1750002020	S.DIO DA2S10100L	T	10.1/18.2
D110	1750002020	S.DIO DA2S10100L	T	10.1/19.6
D111	1750002020	S.DIO DA2S10100L	T	51.1/18.2
D112	1750002020	S.DIO DA2S10100L	T	51.1/19.6
D113	1750001820	S.DIO LRB706F-40T1G <SLVJ>	T	12.5/39.8
D114	1750001820	S.DIO LRB706F-40T1G <SLVJ>	T	53.5/39.8
D115	1750002170	S.DIO DB2S31400L	T	12.4/45.1
D116	1750002170	S.DIO DB2S31400L	T	53.4/45.1
D117	1750001820	S.DIO LRB706F-40T1G <SLVJ>	T	9.9/47.5
D118	1750001820	S.DIO LRB706F-40T1G <SLVJ>	T	50.9/47.5
D119	1750002990	S.DIO BAR88-02V H6327 <RYOYO>	T	17.0/67.1
D120	1750002990	S.DIO BAR88-02V H6327 <RYOYO>	T	15.2/66.3
D121	1750002990	S.DIO BAR88-02V H6327 <RYOYO>	T	60.3/65.2
D122	1750002990	S.DIO BAR88-02V H6327 <RYOYO>	T	54.9/65.1
D123	1750001810	S.DIO L1SS400T1G <SLVJ>	T	109.2/18.9
D124	1750001810	S.DIO L1SS400T1G <SLVJ>	T	111.0/18.1
D201	1750002860	S.VAR BBY57-02V H6327 <RYOYO>	T	86.2/26.4
D202	1750002860	S.VAR BBY57-02V H6327 <RYOYO>	T	90.1/26.1
D203	1750001770	S.VAR 1SV323(TPH3F)	T	83.4/24.1
D204	1750001770	S.VAR 1SV323(TPH3F)	T	83.9/26.0
D205	1750001790	S.DIO 1SS390 TE61	T	87.3/31.4
D206	1750001790	S.DIO 1SS390 TE61	T	82.4/32.4
D207	1750001810	S.DIO L1SS400T1G <SLVJ>	T	83.6/38.2
D208	1750001790	S.DIO 1SS390 TE61	T	75.1/36.3
D209	1750001790	S.DIO 1SS390 TE61	T	78.9/37.9
D212	1750002990	S.DIO BAR88-02V H6327 <RYOYO>	T	65.7/52.5
D213	1750002990	S.DIO BAR88-02V H6327 <RYOYO>	T	62.3/52.5
D223	1750002860	S.VAR BBY57-02V H6327 <RYOYO>	T	42.6/29.6
D224	1750002860	S.VAR BBY57-02V H6327 <RYOYO>	T	45.1/29.3
D225	1750001770	S.VAR 1SV323(TPH3F)	T	37.6/24.3
D226	1750001770	S.VAR 1SV323(TPH3F)	T	38.4/26.1
D227	1750001770	S.VAR 1SV323(TPH3F)	T	40.1/29.1
D228	1750001770	S.VAR 1SV323(TPH3F)	T	79.3/24.4
D229	1750001790	S.DIO 1SS390 TE61	T	42.8/34.6
D230	1750001790	S.DIO 1SS390 TE61	T	36.7/32.4
D231	1750001810	S.DIO L1SS400T1G <SLVJ>	T	32.9/37.3
D232	1750001790	S.DIO 1SS390 TE61	T	30.8/38.3
D233	1750001790	S.DIO 1SS390 TE61	T	32.5/39.4
D234	1750002990	S.DIO BAR88-02V H6327 <RYOYO>	T	21.6/52.5
D235	1750002990	S.DIO BAR88-02V H6327 <RYOYO>	T	24.9/52.5
D236	1750001810	S.DIO L1SS400T1G <SLVJ>	B	40.2/28.1
D304	1750001770	S.VAR 1SV323(TPH3F)	B	133.9/44.9
D307	1750001810	S.DIO L1SS400T1G <SLVJ> #02	T	119.0/55.0
	1750001810	S.DIO L1SS400T1G <SLVJ> #03		
	1750001810	S.DIO L1SS400T1G <SLVJ> #04		
	1750001810	S.DIO L1SS400T1G <SLVJ> #05		
	1750001810	S.DIO L1SS400T1G <SLVJ> #06		
D309	1750001810	S.DIO L1SS400T1G <SLVJ> #03	B	111.6/57.5
	1750001810	S.DIO L1SS400T1G <SLVJ> #04		
	1750001810	S.DIO L1SS400T1G <SLVJ> #06		
D314	1750001810	S.DIO L1SS400T1G <SLVJ> #03	T	119.0/57.9
	1750001810	S.DIO L1SS400T1G <SLVJ> #04		
	1750001810	S.DIO L1SS400T1G <SLVJ> #06		
D315	1750001810	S.DIO L1SS400T1G <SLVJ> #02	T	119.0/56.6
	1750001810	S.DIO L1SS400T1G <SLVJ> #03		
	1750001810	S.DIO L1SS400T1G <SLVJ> #04		
	1750001810	S.DIO L1SS400T1G <SLVJ> #05		
	1750001810	S.DIO L1SS400T1G <SLVJ> #06		
D316	1750001810	S.DIO L1SS400T1G <SLVJ> #03	B	111.6/59.9
	1750001810	S.DIO L1SS400T1G <SLVJ> #04		
	1750001810	S.DIO L1SS400T1G <SLVJ> #06		
D317	1750001810	S.DIO L1SS400T1G <SLVJ> #02	B	111.6/58.7
	1750001810	S.DIO L1SS400T1G <SLVJ> #03		
	1750001810	S.DIO L1SS400T1G <SLVJ> #10		
D319	1750001810	S.DIO L1SS400T1G <SLVJ> #02	T	115.7/59.5
	1750001810	S.DIO L1SS400T1G <SLVJ> #03		
	1750001810	S.DIO L1SS400T1G <SLVJ> #04		
	1750001810	S.DIO L1SS400T1G <SLVJ> #06		
	1750001810	S.DIO L1SS400T1G <SLVJ> #09		
D321	1750001810	S.DIO L1SS400T1G <SLVJ> Only #04	T	119.1/59.5
D322	1750001810	S.DIO L1SS400T1G <SLVJ> #02	B	111.6/61.1
	1750001810	S.DIO L1SS400T1G <SLVJ> #04		
	1750001810	S.DIO L1SS400T1G <SLVJ> #09		
	1750001810	S.DIO L1SS400T1G <SLVJ> #10		
D324	1710001420	DIO 1.5KE20A		
D325	1750001810	S.DIO L1SS400T1G <SLVJ>	B	115.6/66.7
D327	1750001810	S.DIO L1SS400T1G <SLVJ>	T	128.8/68.8
D332	1750002110	S.DIO LRB551V-30T1G <SLVJ>	B	110.8/69.7
D333	1750002110	S.DIO LRB551V-30T1G <SLVJ>	B	109.1/69.7
D334	1750001820	S.DIO LRB706F-40T1G <SLVJ>	T	125.1/58.0
D338	1750001820	S.DIO LRB706F-40T1G <SLVJ>	B	115.9/76.2
D339	1750001820	S.DIO LRB706F-40T1G <SLVJ>	T	121.5/60.8
D340	1750001820	S.DIO LRB706F-40T1G <SLVJ>	T	124.0/41.4
D342	1750001810	S.DIO L1SS400T1G <SLVJ>	B	77.0/24.6
FI100	2020002520	S.CER LTWC450H <JJE>	B	22.4/21.6
FI101	2020002480	S.CER LTWC450E1 <JJE>	B	13.4/21.6
FI102	2020002520	S.CER LTWC450H <JJE>	B	63.4/21.6
FI103	2020002480	S.CER LTWC450E1 <JJE>	B	54.3/21.6
FI104	2030000870	S.MON MFT46.3P3 46.350 MHz (FL-442)	T	12.1/53.2
FI105	2030001170	S.MON 38.85SS10B3 38.85 MHz (FL-481)	T	53.7/53.2
X101	6070000300	S.DIS JTBM450CX24 <JJE>	B	13.2/33.2

[MAIN UNIT]

REF NO.	PARTS NO.	DESCRIPTION	M.	H/V LOCATION
X102	6070000300	S.DIS JTBM450CX24 <JJE>	B	54.1/33.2
X200	6050013940	S.XTA CR-994 NT3225SA 12.8 MHz	B	74.8/12.8
X201	6050013930	S.XTA CR-993 NT3225SA 15.3 MHz	B	36.9/14.9
X300	6050013950	S.XTA CR-995(FA-238) 19.6608 MHz	B	134.4/48.9
L3	6200011730	S.COI LQW18AN10NG00D(650MA)	T	11.9/82.0
L4	6200011730	S.COI LQW18AN10NG00D(650MA)	T	42.5/68.8
L9	6200011670	S.COI LQW18AN82NG00D	B	37.3/62.6
L10	6200011650	S.COI LQW18AN68NG00D	T	70.4/79.4
L11	6200010700	S.COI LQW18AN12NG00D	T	13.5/87.1
L12	6200010700	S.COI LQW18AN12NG00D	T	35.2/69.4
L15	6200011590	S.COI LQW18AN39NG00D	T	13.5/90.9
L16	6200011590	S.COI LQW18AN39NG00D	T	30.9/74.5
L17	6200011770	S.COI LQW18ANR10G00D	T	55.0/81.7
L18	6200011770	S.COI LQW18ANR10G00D	T	69.7/86.5
L21	6200013010	S.COI 0.30-0.9-5TL 10.3N <COMO>	T	27.8/84.1
L22	6200013010	S.COI 0.30-0.9-5TL 10.3N <COMO>	T	13.6/100.0
L23	6200011670	S.COI LQW18AN82NG00D	T	56.9/90.2
L24	6200011670	S.COI LQW18AN82NG00D	T	73.9/93.7
L27	6200012520	S.COI 0.26-1.0-5TL 12N <COMO>	T	12.7/106.5
L28	6200012520	S.COI 0.26-1.0-5TL 12N <COMO>	T	27.1/92.1
L31	6200009290	S.COI LQW18AN47NG00D (LQW1608A47NG00)	T	72.0/99.4
L32	6200009290	S.COI LQW18AN47NG00D (LQW1608A47NG00)	T	58.1/98.3
L33	6200009290	S.COI LQW18AN47NG00D (LQW1608A47NG00)	T	56.1/99.1
L34	6200009290	S.COI LQW18AN47NG00D (LQW1608A47NG00)	T	72.9/101.3
L37	6200009290	S.COI LQW18AN47NG00D (LQW1608A47NG00)	T	27.8/103.8
L38	6200013650	S.COI LQW18ANR27G00D	T	62.8/107.7
L40	6200009980	S.COI C2012C-18NG-A	T	32.8/104.1
L44	6200010020	S.COI C2012C-12NG-A	T	35.3/104.8
L45	6200010350	S.COI C2012C-R27G-A	T	68.8/111.6
L47	6200009890	S.COI C2012C-82NG-A	T	70.8/108.9
L50	6200011001	S.COI ELJRF 56NJFB	T	68.9/50.4
L51	6200011001	S.COI ELJRF 56NJFB	T	70.7/50.4
L52	6200007871	S.COI ELJRF 39NJFB	B	31.3/37.7
L53	6200007911	S.COI ELJRF 18NJFB	B	76.2/38.3
L55	6200010991	S.COI ELJRF 47NJFB	B	77.5/40.8
L57	6200007881	S.COI ELJRF 33NJFB	B	35.2/42.7
L58	6200007911	S.COI ELJRF 18NJFB	B	37.6/43.9
L60	6200007871	S.COI ELJRF 39NJFB	B	84.1/46.2
L62	6200007911	S.COI ELJRF 18NJFB	B	40.8/43.6
L64	6200007891	S.COI ELJRF 27NJFB	B	40.3/46.3
L65	6200007911	S.COI ELJRF 18NJFB	B	42.2/49.5
L67	6200010060	S.COI AS080647-56N	B	88.1/95.4
L68	6200010060	S.COI AS080647-56N	B	85.3/104.2
L69	6200010150	S.COI AS080340-15N	B	42.2/91.5
L73	6200010160	S.COI AS080440-22N	B	42.5/99.1
L76	6200010420	S.COI FHW1210HC 1R0JGT <JJE>	B	83.5/117.7
L79	6200010060	S.COI AS080647-56N	B	65.9/117.7
L80	6200010060	S.COI AS080647-56N	B	74.7/114.1
L81	6200010420	S.COI FHW1210HC 1R0JGT <JJE>	B	46.9/101.6
L83	6200010070	S.COI AS080747-68N	B	59.0/119.0
L84	6200010150	S.COI AS080340-15N	B	40.9/113.1
L85	6200012900	S.COI 0.30-2.0-7TL 57.2N <COMO>	T	72.8/112.9
L86	6200010150	S.COI AS080340-15N	B	38.7/108.3
L87	6200010170	S.COI AS080447-33N	B	52.2/120.6
L88	6200010150	S.COI AS080340-15N	B	40.2/117.8
L90	6200010040	S.COI AS100340-10N-A	B	29.8/116.9
L92	6200012960	S.COI 0.45-1.4-4TL 12.1N <COMO>	T	35.1/111.4
L94	6200010160	S.COI AS080440-22N	B	22.6/111.6
L96	6200010040	S.COI AS100340-10N-A	B	14.6/111.2
L99	6200009250	S.COI LQW18ANR22G00D (LQW1608AR22G00)	T	15.4/103.1
L100	6200009250	S.COI LQW18ANR22G00D (LQW1608AR22G00)	T	15.4/84.6
L101	6200009250	S.COI LQW18ANR22G00D (LQW1608AR22G00)	T	26.3/88.2
L102	6200009250	S.COI LQW18ANR22G00D (LQW1608AR22G00)	T	38.9/69.3
L200	6200005140	S.COI MLF1608D R33K-T	T	12.4/42.4
L201	6200005140	S.COI MLF1608D R33K-T	T	53.5/42.4
L205	6200011090	S.COI C2012C-R56J-A	T	18.4/70.9
L206	6200011090	S.COI C2012C-R56J-A	T	13.5/70.0
L207	6200011090	S.COI C2012C-R56J-A	T	61.1/67.4
L208	6200011090	S.COI C2012C-R56J-A	T	55.8/67.4
L209	6200013760	S.COI MLK1005S82NJT	T	20.7/64.7
L210	6200013760	S.COI MLK1005S82NJT	T	63.2/70.8
L211	6200013900	S.COI MLK1005S5N6ST	T	17.2/73.8
L212	6200013850	S.COI MLK1005S15NJT	T	69.2/76.5
L213	6200013850	S.COI MLK1005S15NJT	T	58.9/75.0
L214	6200013850	S.COI MLK1005S15NJT	T	64.4/68.0
L215	6200013850	S.COI MLK1005S15NJT	T	54.3/72.9
L300	6200004480	S.COI MLF1608D R82K-T	B	71.5/29.1
L301	6200003540	S.COI MLF1608D R22K-T	B	70.0/27.9
L302	6190002030	S.COI MLG1608S 1R0J-T	T	88.1/25.4
L303	6190002030	S.COI MLG1608S 1R0J-T	T	85.9/24.9
L304	6200013460	S.COI C2012H-10NH-R-0231	T	86.4/28.1
L305	6200015290	S.COI C2012H-5N6D-R-0231	T	89.7/27.8
L306	6200015250	S.COI C2012H-27NH-R-0231	T	82.1/26.5
L307	6200015250	S.COI C2012H-27NH-R-0231	T	82.6/29.2
L309	6200011031	S.COI ELJRF R10JFB	T	75.1/28.9
L310	6200007871	S.COI ELJRF 39NJFB	T	86.5/38.8
L311	6200009351	S.COI ELJRE R22GFA	T	76.9/34.6
L313	6200015410	S.COI MLK1005SR33JT	T	62.7/51.2
L314	6200013760	S.COI MLK1005S82NJT	T	67.4/56.2
L315	6200013820	S.COI MLK1005S27NJT	T	60.6/56.8
L316	6200010991	S.COI ELJRF 47NJFB	T	67.4/57.8
L324	6200004480	S.COI MLF1608D R82K-T	B	29.3/30.2
L325	6200003540	S.COI MLF1608D R22K-T	B	28.5/28.0
L326	6190002030	S.COI MLG1608S 1R0J-T	T	43.0/27.8

Eqv.= This component is equivalent to the REF No. component listed above, and may be substituted on parts orders and repairs.

M.=Mounted side (T: Mounted on the Top side, B: Mounted on the Bottom side)
S.=Surface mount

[MAIN UNIT]

REF NO.	PARTS NO.	DESCRIPTION	M.	H/V LOCATION
L327	6190002030	S.COI MLG1608S 1R0J-T	T	40.4/24.9
L328	6200013460	S.COI C2012H-10NH-R-0231	T	41.9/31.4
L329	6200015290	S.COI C2012H-5N6D-R-0231	T	45.2/31.1
L330	6200015250	S.COI C2012H-27NH-R-0231	T	36.5/26.5
L331	6200015250	S.COI C2012H-27NH-R-0231	T	36.9/29.2
L333	6200011031	S.COI ELJRF R10JFB	T	29.8/30.5
L334	6200007871	S.COI ELJRF 39NJFB	T	35.8/38.0
L335	6200009351	S.COI ELJRE R22GFA	T	31.1/36.5
L336	6200015410	S.COI MLK1005SR33JT	T	21.9/51.2
L337	6200013820	S.COI MLK1005S27NJT	T	21.5/56.6
L338	6200013760	S.COI MLK1005S82NJT	T	26.6/56.2
L339	6200013790	S.COI MLK1005S47NJT	T	26.6/57.8
L343	6200013850	S.COI MLK1005S15NJT	T	21.8/54.9
L344	6200013790	S.COI MLK1005S47NJT	T	21.5/58.2
L346	6200013850	S.COI MLK1005S15NJT	T	61.9/54.5
L347	6200013790	S.COI MLK1005S47NJT	T	60.8/58.4
L350	6200013800	S.COI MLK1005S39NJT	T	23.8/57.6
L351	6200013800	S.COI MLK1005S39NJT	T	64.0/57.2
L352	6200013840	S.COI MLK1005S18NJT	T	81.0/37.8
L353	6200013840	S.COI MLK1005S18NJT	T	34.4/38.6
R13	7030005090	S.RES ERJ2GEJ 104 X (100K)	T	11.5/84.3
R14	7030005090	S.RES ERJ2GEJ 104 X (100K)	T	40.1/67.7
R15	7030005090	S.RES ERJ2GEJ 104 X (100K)	T	11.5/85.2
R16	7030005090	S.RES ERJ2GEJ 104 X (100K)	T	37.6/67.7
R21	7030008280	S.RES ERJ2GEJ 271 X (270)	T	10.6/90.7
R22	7030008280	S.RES ERJ2GEJ 271 X (270)	T	29.1/74.3
R23	7030005090	S.RES ERJ2GEJ 104 X (100K)	B	40.5/61.2
R24	7030005090	S.RES ERJ2GEJ 104 X (100K)	T	74.8/81.8
R27	7030005090	S.RES ERJ2GEJ 104 X (100K)	B	41.4/61.2
R28	7030005090	S.RES ERJ2GEJ 104 X (100K)	T	74.8/82.7
R29	7030005090	S.RES ERJ2GEJ 104 X (100K)	B	44.4/62.9
R30	7030005090	S.RES ERJ2GEJ 104 X (100K)	T	70.9/84.9
R31	7030004980	S.RES ERJ2GEJ 101 X (100)	T	12.4/93.2
R32	7030004980	S.RES ERJ2GEJ 101 X (100)	T	32.3/78.5
R33	7030005080	S.RES ERJ2GEJ 823 X (82K)	T	12.6/95.4
R34	7030005080	S.RES ERJ2GEJ 823 X (82K)	T	28.7/78.1
R35	7030005530	S.RES ERJ2GEJ 100 X (10)	T	13.8/96.0
R36	7030005530	S.RES ERJ2GEJ 100 X (10)	T	28.3/76.3
R37	7030007350	S.RES ERJ2GEJ 393 X (39K)	T	16.2/94.9
R38	7030007350	S.RES ERJ2GEJ 393 X (39K)	T	29.2/79.9
R39	7030007270	S.RES ERJ2GEJ 151 X (150)	T	54.7/80.6
R40	7030007270	S.RES ERJ2GEJ 151 X (150)	T	70.7/86.5
R41	7030010040	S.RES ERJ2GEJ-JPW	T	15.9/96.1
R42	7030010040	S.RES ERJ2GEJ-JPW	T	26.9/76.9
R43	7030005090	S.RES ERJ2GEJ 104 X (100K)	T	15.9/97.0
R44	7030005090	S.RES ERJ2GEJ 104 X (100K)	T	26.9/75.3
R45	7030008280	S.RES ERJ2GEJ 271 X (270)	T	52.8/81.2
R46	7030008280	S.RES ERJ2GEJ 271 X (270)	T	70.7/88.1
R47	7030005070	S.RES ERJ2GEJ 683 X (68K)	T	12.6/96.5
R48	7030005070	S.RES ERJ2GEJ 683 X (68K)	T	28.3/77.2
R49	7030004980	S.RES ERJ2GEJ 101 X (100)	T	54.5/82.9
R50	7030004980	S.RES ERJ2GEJ 101 X (100)	T	74.5/85.7
R51	7030005080	S.RES ERJ2GEJ 823 X (82K)	T	57.7/85.7
R52	7030005080	S.RES ERJ2GEJ 823 X (82K)	T	73.1/89.3
R53	7030005530	S.RES ERJ2GEJ 100 X (10)	T	56.1/85.7
R54	7030005530	S.RES ERJ2GEJ 100 X (10)	T	71.9/89.7
R55	7030007350	S.RES ERJ2GEJ 393 X (39K)	T	57.7/86.7
R56	7030007350	S.RES ERJ2GEJ 393 X (39K)	T	74.5/88.4
R57	7030010040	S.RES ERJ2GEJ-JPW	T	54.5/86.6
R58	7030010040	S.RES ERJ2GEJ-JPW	T	70.1/89.7
R59	7030005090	S.RES ERJ2GEJ 104 X (100K)	T	54.5/85.7
R60	7030005090	S.RES ERJ2GEJ 104 X (100K)	T	71.9/91.3
R61	7030005070	S.RES ERJ2GEJ 683 X (68K)	T	56.1/86.6
R62	7030005070	S.RES ERJ2GEJ 683 X (68K)	T	71.0/89.7
R65	7030005090	S.RES ERJ2GEJ 104 X (100K)	T	12.1/102.6
R66	7030005090	S.RES ERJ2GEJ 104 X (100K)	T	27.9/86.9
R67	7030005090	S.RES ERJ2GEJ 104 X (100K)	T	12.1/103.5
R68	7030005090	S.RES ERJ2GEJ 104 X (100K)	T	27.9/89.3
R69	7030005090	S.RES ERJ2GEJ 104 X (100K)	T	55.9/94.1
R70	7030005090	S.RES ERJ2GEJ 104 X (100K)	T	77.0/96.5
R73	7030005090	S.RES ERJ2GEJ 104 X (100K)	T	55.9/95.0
R74	7030005090	S.RES ERJ2GEJ 104 X (100K)	T	77.0/97.4
R75	7030005240	S.RES ERJ2GEJ 473 X (47K)	T	76.3/69.0
R76	7030005240	S.RES ERJ2GEJ 473 X (47K)	T	76.3/69.9
R77	7030008400	S.RES ERJ2GEJ 182 X (1.8K)	T	19.4/106.5
R78	7030008400	S.RES ERJ2GEJ 182 X (1.8K)	T	53.9/102.8
R79	7030008400	S.RES ERJ2GEJ 182 X (1.8K)	T	73.4/104.2
R80	7030008400	S.RES ERJ2GEJ 182 X (1.8K)	T	32.4/95.6
R81	7030004990	S.RES ERJ2GEJ 221 X (220)	T	59.7/104.8
R82	7030004990	S.RES ERJ2GEJ 221 X (220)	T	24.5/104.5
R83	7030004990	S.RES ERJ2GEJ 221 X (220)	T	26.1/97.2
R84	7030004990	S.RES ERJ2GEJ 221 X (220)	T	62.1/105.1
R85	7030010040	S.RES ERJ2GEJ-JPW	T	25.4/103.2
R88	7030009160	S.RES ERJ2GEJ 181 X (180)	T	30.0/104.5
R93	7030007270	S.RES ERJ2GEJ 151 X (150)	T	26.8/99.9
R94	7030010040	S.RES ERJ2GEJ-JPW	T	60.9/105.3
R96	7030004980	S.RES ERJ2GEJ 101 X (100)	T	62.3/109.9
R97	7030005530	S.RES ERJ2GEJ 100 X (10)	T	30.0/102.5
R100	7030005010	S.RES ERJ2GEJ 681 X (680)	T	61.8/107.8
R101	7030004990	S.RES ERJ2GEJ 221 X (220)	T	66.7/106.8
R102	7030005120	S.RES ERJ2GEJ 102 X (1K)	T	30.0/103.4
R103	7030005090	S.RES ERJ2GEJ 104 X (100K)	T	31.5/101.3
R106	7030005530	S.RES ERJ2GEJ 100 X (10)	T	64.1/109.9
R107	7030005080	S.RES ERJ2GEJ 823 X (82K)	T	31.2/102.9
R108	7030005090	S.RES ERJ2GEJ 104 X (100K)	T	32.7/100.2
R111	7030005220	S.RES ERJ2GEJ 223 X (22K)	T	63.2/109.9
R112	7030005720	S.RES ERJ2GEJ 563 X (56K)	T	64.1/111.5
R115	7030005720	S.RES ERJ2GEJ 563 X (56K)	T	65.4/111.3
R116	7030005240	S.RES ERJ2GEJ 473 X (47K)	T	68.0/108.8
R123	7030010040	S.RES ERJ2GEJ-JPW	T	33.1/107.7
R132	7030005120	S.RES ERJ2GEJ 102 X (1K)	T	91.1/45.2
R133	7030005050	S.RES ERJ2GEJ 103 X (10K)	T	98.1/110.2
R134	7030005240	S.RES ERJ2GEJ 473 X (47K)	T	90.2/45.2

[MAIN UNIT]

REF NO.	PARTS NO.	DESCRIPTION	M.	H/V LOCATION
R135	7030005090	S.RES ERJ2GEJ 104 X (100K)	T	100.9/112.5
R136	7030005120	S.RES ERJ2GEJ 102 X (1K)	T	99.4/109.2
R137	7030004980	S.RES ERJ2GEJ 101 X (100)	T	70.9/52.2
R138	7030005040	S.RES ERJ2GEJ 472 X (4.7K)	T	68.8/51.8
R140	7030005120	S.RES ERJ2GEJ 102 X (1K)	T	47.8/49.1
R142	7030005240	S.RES ERJ2GEJ 473 X (47K)	T	46.9/49.1
R146	7030007270	S.RES ERJ2GEJ 151 X (150)	B	72.6/41.5
R147	7030009200	S.RES ERJ2GEJ 390 X (39)	B	73.0/40.3
R150	7030008410	S.RES ERJ2GEJ 392 X (3.9K)	B	29.6/35.1
R151	7030007270	S.RES ERJ2GEJ 151 X (150)	B	74.0/38.9
R155	7030007280	S.RES ERJ2GEJ 331 X (330)	B	31.3/38.6
R156	7030005300	S.RES ERJ2GEJ 150 X (15)	B	32.5/39.3
R157	7030005050	S.RES ERJ2GEJ 103 X (10K)	B	29.6/34.2
R158	7030005040	S.RES ERJ2GEJ 472 X (4.7K)	B	76.6/39.5
R159	7030005120	S.RES ERJ2GEJ 102 X (1K)	B	81.4/39.1
R160	7030004990	S.RES ERJ2GEJ 221 X (220)	B	73.9/40.7
R161	7030005710	S.RES ERJ2GEJ 121 X (120)	B	29.7/38.9
R162	7030007280	S.RES ERJ2GEJ 331 X (330)	B	31.3/40.7
R163	7030004990	S.RES ERJ2GEJ 221 X (220)	B	74.8/40.7
R164	7030008410	S.RES ERJ2GEJ 392 X (3.9K)	B	33.4/41.1
R165	7030005010	S.RES ERJ2GEJ 681 X (680)	B	31.3/41.6
R166	7030004980	S.RES ERJ2GEJ 101 X (100)	B	31.8/34.9
R167	7030005710	S.RES ERJ2GEJ 121 X (120)	B	33.0/34.5
R168	7030005590	S.RES ERJ2GEJ 680 X (68)	B	84.1/44.4
R170	7030004990	S.RES ERJ2GEJ 221 X (220)	B	35.7/43.9
R172	7030005300	S.RES ERJ2GEJ 150 X (15)	B	81.9/45.1
R173	7030008410	S.RES ERJ2GEJ 392 X (3.9K)	B	84.1/45.3
R174	7030005120	S.RES ERJ2GEJ 102 X (1K)	B	86.8/43.2
R175	7030007250	S.RES ERJ2GEJ 220 X (22)	B	39.4/43.2
R177	7030010090	S.RES ERJ2GEJ 180 X (18)	B	84.1/48.0
R179	7030005530	S.RES ERJ2GEJ 100 X (10)	B	86.8/49.5
R183	7030005040	S.RES ERJ2GEJ 472 X (4.7K)	B	40.3/45.4
R184	7030005010	S.RES ERJ2GEJ 681 X (680)	B	41.2/42.4
R185	7030004980	S.RES ERJ2GEJ 101 X (100)	B	85.6/50.7
R186	7030005530	S.RES ERJ2GEJ 100 X (10)	B	85.2/49.5
R187	7030007260	S.RES ERJ2GEJ 330 X (33)	B	38.7/46.3
R194	7030008280	S.RES ERJ2GEJ 271 X (270)	B	41.0/50.7
R195	7030010090	S.RES ERJ2GEJ 180 X (18)	B	40.6/49.5
R197	7030008280	S.RES ERJ2GEJ 271 X (270)	B	40.1/50.7
R202	7030005090	S.RES ERJ2GEJ 104 X (100K)	B	86.9/69.9
R203	7030010040	S.RES ERJ2GEJ-JPW	B	86.9/68.3
R209	7030005600	S.RES ERJ2GEJ 273 X (27K)	B	76.5/103.1
R211	7030004980	S.RES ERJ2GEJ 101 X (100)	B	89.0/67.4
R214	7030005120	S.RES ERJ2GEJ 102 X (1K)	B	89.4/66.0
R215	7030007060	S.RES ERJ2GEJ 684X (680K)	B	87.8/66.9
R217	7030008400	S.RES ERJ2GEJ 182 X (1.8K)	B	86.3/53.2
R218	7030007280	S.RES ERJ2GEJ 331 X (330)	B	87.5/53.7
R224	7030005220	S.RES ERJ2GEJ 223 X (22K)	B	43.2/78.2
R225	7030005050	S.RES ERJ2GEJ 103 X (10K)	B	84.8/64.2
R226	7030007290	S.RES ERJ2GEJ 222 X (2.2K)	B	44.8/72.5
R227	7030005110	S.RES ERJ2GEJ 224 X (220K)	B	84.8/66.4
R229	7030005220	S.RES ERJ2GEJ 223 X (22K)	B	76.4/101.9
R230	7030004980	S.RES ERJ2GEJ 101 X (100)	B	88.9/55.0
R232	7030005040	S.RES ERJ2GEJ 472 X (4.7K)	B	83.9/66.4
R233	7030006230	S.RES ERJ12YJ151U (150)	B	85.4/112.5
R234	7520000290	S.POS PRF18BE471QB5RB	T	45.3/106.3
R236	7030005120	S.RES ERJ2GEJ 102 X (1K)	B	89.6/56.7
R237	7030005060	S.RES ERJ2GEJ 333 X (33K)	B	84.4/63.0
R239	7030006230	S.RES ERJ12YJ151U (150)	B	46.8/95.6
R241	7030007340	S.RES ERJ2GEJ 153 X (15K)	B	31.6/99.9
R242	7030010010	S.RES ERJ2RKF 334 X (330K)	B	82.9/59.8
R245	7030005110	S.RES ERJ2GEJ 224 X (220K)	B	88.4/56.2
R246	7030005050	S.RES ERJ2GEJ 103 X (10K)	B	88.0/55.0
R247	7030005090	S.RES ERJ2GEJ 104 X (100K)	B	86.8/56.2
R249	7030008410	S.RES ERJ2GEJ 392 X (3.9K)	B	90.3/60.1
R250	7030007290	S.RES ERJ2GEJ 222 X (2.2K)	T	78.3/103.0
R251	7030005060	S.RES ERJ2GEJ 333 X (33K)	B	84.7/55.9
R252	7520000290	S.POS PRF18BE471QB5RB	T	79.2/118.9
R256	7030010010	S.RES ERJ2RKF 334 X (330K)	B	84.1/59.4
R257	7030005080	S.RES ERJ2GEJ 823 X (82K)	B	11.1/111.2
R262	7410001140	S.ARR EXB28V104JX	T	72.4/63.2
R264	7030003860	S.RES ERJ3GE JPW V	T	11.6/99.4
R265	7030003860	S.RES ERJ3GE JPW V	T	14.4/106.9
R266	7030003860	S.RES ERJ3GE JPW V	T	29.2/92.3
R267	7030003860	S.RES ERJ3GE JPW V	T	29.9/83.8
R268	7030003860	S.RES ERJ3GE JPW V	T	58.1/90.2
R269	7030003860	S.RES ERJ3GE JPW V	T	72.0/94.4
R270	7030010040	S.RES ERJ2GEJ-JPW	B	40.2/53.5
R271	7030010040	S.RES ERJ2GEJ-JPW	B	41.1/53.5
R300	7030005240	S.RES ERJ2GEJ 473 X (47K)	T	115.2/12.3
R301	7030005120	S.RES ERJ2GEJ 102 X (1K)	T	26.3/5.7
R302	7030005000	S.RES ERJ2GEJ 471 X (470)	T	118.7/18.0
R303	7030005090	S.RES ERJ2GEJ 104 X (100K)	T	16.9/14.4
R304	7030005100	S.RES ERJ2GEJ 154 X (150K)	T	109.8/21.0
R305	7030008400	S.RES ERJ2GEJ 182 X (1.8K)	T	117.8/18.0
R306	7030005040	S.RES ERJ2GEJ 472 X (4.7K)	T	15.9/14.4
R307	7030005120	S.RES ERJ2GEJ 102 X (1K)	T	123.3/57.0
R308	7030005120	S.RES ERJ2GEJ 102 X (1K)	B	122.6/39.9
R309	7030007280	S.RES ERJ2GEJ 331 X (330)	T	107.3/18.4
R311	7030005050	S.RES ERJ2GEJ 103 X (10K)	T	32.6/13.4
R312	7030005220	S.RES ERJ2GEJ 223 X (22K)	T	22.6/13.1
R313	7030005050	S.RES ERJ2GEJ 103 X (10K)	T	24.3/11.7
R317	7030010010	S.RES ERJ2RKF 334 X (330K)	T	33.5/13.4
R319	7030012270	S.RES ERJ2RKD 1203X (120K)	T	34.0/12.2
R320	7030005950	S.RES RR0510P-123-D (12K)	T	34.4/13.4
R321	7030007290	S.RES ERJ2GEJ 222 X (2.2K)	T	122.3/13.3
R322	7030007290	S.RES ERJ2GEJ 222 X (2.2K)	T	22.0/14.4
R324	7030005090	S.RES ERJ2GEJ 104 X (100K)	T	22.9/14.4
R325	7030005060	S.RES ERJ2GEJ 333 X (33K)	T	107.7/16.2
R326	7030005160	S.RES ERJ2GEJ 105 X (1M)	T	111.0/21.5
R327	7030005170	S.RES ERJ2GEJ 474 X (470K)	T	34.0/11.3
R328	7030005090	S.RES ERJ2GEJ 104 X (100K)	T	119.8/16.4
R335	7030007340	S.RES ERJ2GEJ 153 X (15K)	T	29.7/4.0
R343	7030005110	S.RES ERJ2GEJ 224 X (220K)	T	31.4/4.0
R344	7030007290	S.RES ERJ2GEJ 222 X (2.2K)	T	125.0/12.9

Eqv.= This component is equivalent to the REF No. component listed above, and may be substituted on parts orders and repairs.

M.=Mounted side (T: Mounted on the Top side, B: Mounted on the Bottom side)
S.=Surface mount

[MAIN UNIT]

REF NO.	PARTS NO.	DESCRIPTION	M.	H/V LOCATION
R348	7030007290	S.RES ERJ2GEJ 222 X (2.2K)	T	117.2/10.1
R352	7030008010	S.RES ERJ2GEJ 123 X (12K)	T	133.1/104.5
R354	7030000100	S.RES MCR10EZHJ 4.7 (4R7)	T	108.6/113.0
R355	7030007320	S.RES ERJ2GEJ 225 X (2.2M)	T	129.0/77.0
R358	7030000100	S.RES MCR10EZHJ 4.7 (4R7)	T	131.7/105.4
R359	7030003860	S.RES ERJ3GE JPW V	T	134.7/109.3
R360	7030003860	S.RES ERJ3GE JPW V	T	130.2/109.5
R361	7030003860	S.RES ERJ3GE JPW V	T	121.7/121.8
R362	7030003860	S.RES ERJ3GE JPW V	T	108.5/115.5
R368	7030007340	S.RES ERJ2GEJ 153 X (15K)	T	127.4/77.9
R369	7030005160	S.RES ERJ2GEJ 105 X (1M)	T	128.7/74.0
R374	7030005120	S.RES ERJ2GEJ 102 X (1K)	T	125.8/77.9
R375	7030005160	S.RES ERJ2GEJ 105 X (1M)	T	125.9/74.0
R376	7030007340	S.RES ERJ2GEJ 153 X (15K)	B	132.1/90.1
R377	7030005160	S.RES ERJ2GEJ 105 X (1M)	B	132.1/94.5
R379	7030005220	S.RES ERJ2GEJ 223 X (22K)	T	128.3/71.9
R380	7030005090	S.RES ERJ2GEJ 104 X (100K)	T	113.9/72.7
R381	7030005220	S.RES ERJ2GEJ 223 X (22K)	T	125.4/72.8
R382	7030005090	S.RES ERJ2GEJ 104 X (100K)	T	115.5/69.1
R383	7030005220	S.RES ERJ2GEJ 223 X (22K)	B	131.6/96.6
R385	7030005090	S.RES ERJ2GEJ 104 X (100K)	T	118.1/70.6
R387	7030005220	S.RES ERJ2GEJ 223 X (22K)	T	123.0/77.5
R389	7030005220	S.RES ERJ2GEJ 223 X (22K)	T	117.6/78.7
R390	7030010040	S.RES ERJ2GEJ-JPW	T	120.3/77.5
R391	7030010040	S.RES ERJ2GEJ-JPW	T	118.5/77.5
R394	7030005220	S.RES ERJ2GEJ 223 X (22K)	T	121.2/77.5
R396	7030005050	S.RES ERJ2GEJ 103 X (10K)	T	115.1/73.1
R399	7030005050	S.RES ERJ2GEJ 103 X (10K)	T	116.0/73.1
R401	7030005220	S.RES ERJ2GEJ 223 X (22K)	T	122.1/77.5
R403	7030007350	S.RES ERJ2GEJ 393 X (39K)	B	107.7/60.8
R405	7030005040	S.RES ERJ2GEJ 472 X (4.7K)	T	103.9/67.5
R407	7030005230	S.RES ERJ2GEJ 334 X (330K)	T	102.2/70.7
R408	7030005230	S.RES ERJ2GEJ 334 X (330K)	T	102.2/69.7
R409	7030005090	S.RES ERJ2GEJ 104 X (100K)	B	99.9/28.1
R410	7030005090	S.RES ERJ2GEJ 104 X (100K)	T	114.7/15.3
R411	7030005600	S.RES ERJ2GEJ 273 X (27K)	T	102.2/71.6
R412	7030005600	S.RES ERJ2GEJ 273 X (27K)	T	101.8/68.5
R413	7030005090	S.RES ERJ2GEJ 104 X (100K)	T	119.9/10.3
R414	7030004980	S.RES ERJ2GEJ 101 X (100)	T	90.7/13.6
R415	7030005090	S.RES ERJ2GEJ 104 X (100K)	T	96.1/45.9
R416	7030005090	S.RES ERJ2GEJ 104 X (100K)	T	96.6/44.7
R417	7030010040	S.RES ERJ2GEJ-JPW	T	119.4/77.5
R418	7030010040	S.RES ERJ2GEJ-JPW	T	117.6/77.5
R419	7030005090	S.RES ERJ2GEJ 104 X (100K)	B	100.0/19.3
R420	7030005090	S.RES ERJ2GEJ 104 X (100K)	B	102.0/26.8
R421	7030005090	S.RES ERJ2GEJ 104 X (100K)	B	130.5/43.8
R422	7030005090	S.RES ERJ2GEJ 104 X (100K)	B	130.5/42.9
R423	7030005160	S.RES ERJ2GEJ 105 X (1M)	T	107.7/60.4
R424	7030005160	S.RES ERJ2GEJ 105 X (1M)	T	100.5/60.4
R425	7030005090	S.RES ERJ2GEJ 104 X (100K)	B	116.0/39.5
R426	7030005090	S.RES ERJ2GEJ 104 X (100K)	B	100.8/27.6
R427	7030005090	S.RES ERJ2GEJ 104 X (100K)	T	106.7/66.1
R428	7030005040	S.RES ERJ2GEJ 472 X (4.7K)	T	107.7/66.1
R429	7030005240	S.RES ERJ2GEJ 473 X (47K)	T	106.3/61.3
R430	7030005240	S.RES ERJ2GEJ 473 X (47K)	T	99.0/61.2
R431	7030008410	S.RES ERJ2GEJ 392 X (3.9K)	T	107.7/58.6
R432	7030008410	S.RES ERJ2GEJ 392 X (3.9K)	T	100.5/58.6
R433	7030005090	S.RES ERJ2GEJ 104 X (100K)	T	86.0/8.4
R435	7030005220	S.RES ERJ2GEJ 223 X (22K)	T	107.3/56.5
R436	7030005220	S.RES ERJ2GEJ 223 X (22K)	T	100.1/56.5
R437	7030005090	S.RES ERJ2GEJ 104 X (100K)	T	114.7/14.3
R438	7030005090	S.RES ERJ2GEJ 104 X (100K)	T	119.0/10.3
R439	7030010040	S.RES ERJ2GEJ-JPW	T	103.8/73.7
R440	7030010040	S.RES ERJ2GEJ-JPW	T	87.8/16.3
R443	7030005050	S.RES ERJ2GEJ 103 X (10K)	T	96.0/15.8
R444	7030010040	S.RES ERJ2GEJ-JPW	T	97.4/13.7
R445	7030005040	S.RES ERJ2GEJ 472 X (4.7K)	T	104.1/61.5
R446	7030005040	S.RES ERJ2GEJ 472 X (4.7K)	T	96.9/61.5
R447	7030005160	S.RES ERJ2GEJ 105 X (1M)	T	104.5/57.7
R448	7030005160	S.RES ERJ2GEJ 105 X (1M)	T	97.3/57.7
R449	7030005000	S.RES ERJ2GEJ 471 X (470)	T	105.1/61.5
R450	7030005000	S.RES ERJ2GEJ 471 X (470)	T	97.8/61.5
R451	7030005090	S.RES ERJ2GEJ 104 X (100K)	T	104.2/17.2
R452	7030005090	S.RES ERJ2GEJ 104 X (100K)	T	105.9/17.2
R453	7030005240	S.RES ERJ2GEJ 473 X (47K)	T	99.7/14.5
R454	7030005600	S.RES ERJ2GEJ 273 X (27K)	T	98.7/12.9
R455	7030005100	S.RES ERJ2GEJ 154 X (150K)	T	98.7/14.5
R456	7030005060	S.RES ERJ2GEJ 333 X (33K)	T	100.6/14.5
R457	7030007350	S.RES ERJ2GEJ 393 X (39K)	T	103.3/55.6
R458	7030007350	S.RES ERJ2GEJ 393 X (39K)	T	96.1/55.8
R459	7030005050	S.RES ERJ2GEJ 103 X (10K)	T	29.0/2.8
R461	7030005090	S.RES ERJ2GEJ 104 X (100K)	T	110.5/13.5
R463	7030005220	S.RES ERJ2GEJ 223 X (22K)	T	103.3/54.0
R464	7030005220	S.RES ERJ2GEJ 223 X (22K)	T	96.1/54.0
R465	7030008010	S.RES ERJ2GEJ 123 X (12K)	T	103.3/52.4
R466	7030008010	S.RES ERJ2GEJ 123 X (12K)	T	96.1/52.2
R467	7030005050	S.RES ERJ2GEJ 103 X (10K)	T	18.2/19.7
R468	7030005050	S.RES ERJ2GEJ 103 X (10K)	T	58.9/19.2
R469	7030005090	S.RES ERJ2GEJ 104 X (100K)	T	108.0/31.8
R470	7030005090	S.RES ERJ2GEJ 104 X (100K)	T	108.0/38.3
R471	7030007340	S.RES ERJ2GEJ 153 X (15K)	T	13.9/21.9
R472	7030007340	S.RES ERJ2GEJ 153 X (15K)	T	54.9/21.9
R473	7030005700	S.RES ERJ2GEJ 274 X (270K)	T	107.0/35.7
R474	7030005090	S.RES ERJ2GEJ 104 X (100K)	T	108.0/33.6
R475	7030005700	S.RES ERJ2GEJ 274 X (270K)	T	107.0/42.2
R476	7030005090	S.RES ERJ2GEJ 104 X (100K)	T	108.0/40.1
R477	7030005050	S.RES ERJ2GEJ 103 X (10K)	T	32.6/3.7
R479	7030007280	S.RES ERJ2GEJ 331 X (330)	T	108.0/32.7
R480	7030007280	S.RES ERJ2GEJ 331 X (330)	T	108.0/39.2
R481	7030008010	S.RES ERJ2GEJ 123 X (12K)	T	16.0/21.9
R482	7030008010	S.RES ERJ2GEJ 123 X (12K)	T	11.0/22.7
R483	7030008010	S.RES ERJ2GEJ 123 X (12K)	T	57.0/21.9
R484	7030008010	S.RES ERJ2GEJ 123 X (12K)	T	52.0/22.7
R485	7030005060	S.RES ERJ2GEJ 333 X (33K)	T	104.3/35.7
R486	7030005060	S.RES ERJ2GEJ 333 X (33K)	T	104.3/42.2

[MAIN UNIT]

REF NO.	PARTS NO.	DESCRIPTION	M.	H/V LOCATION
R487	7030005050	S.RES ERJ2GEJ 103 X (10K)	T	105.3/31.8
R488	7030005050	S.RES ERJ2GEJ 103 X (10K)	T	105.3/38.3
R489	7030008410	S.RES ERJ2GEJ 392 X (3.9K)	T	105.2/35.7
R490	7030008410	S.RES ERJ2GEJ 392 X (3.9K)	T	105.2/42.2
R491	7030005070	S.RES ERJ2GEJ 683 X (68K)	T	103.3/33.5
R492	7030005070	S.RES ERJ2GEJ 683 X (68K)	T	103.3/40.0
R493	7030008400	S.RES ERJ2GEJ 182 X (1.8K)	T	11.8/17.9
R494	7030008400	S.RES ERJ2GEJ 182 X (1.8K)	T	11.8/20.0
R495	7030008400	S.RES ERJ2GEJ 182 X (1.8K)	T	52.7/17.9
R496	7030008400	S.RES ERJ2GEJ 182 X (1.8K)	T	52.7/20.0
R497	7030005070	S.RES ERJ2GEJ 683 X (68K)	T	101.7/33.5
R498	7030005090	S.RES ERJ2GEJ 104 X (100K)	T	101.7/34.4
R499	7030005070	S.RES ERJ2GEJ 683 X (68K)	T	101.7/40.0
R500	7030005090	S.RES ERJ2GEJ 104 X (100K)	T	101.7/40.9
R501	7030007340	S.RES ERJ2GEJ 153 X (15K)	T	9.4/21.0
R502	7030007340	S.RES ERJ2GEJ 153 X (15K)	T	50.4/21.0
R503	7030005050	S.RES ERJ2GEJ 103 X (10K)	T	100.1/34.4
R504	7030005050	S.RES ERJ2GEJ 103 X (10K)	T	100.1/40.9
R505	7030005070	S.RES ERJ2GEJ 683 X (68K)	T	100.1/33.5
R506	7030005070	S.RES ERJ2GEJ 683 X (68K)	T	100.1/40.0
R507	7030007570	S.RES ERJ2GEJ 122 X (1.2K)	T	18.7/24.6
R508	7030007570	S.RES ERJ2GEJ 122 X (1.2K)	T	59.6/24.6
R509	7030008400	S.RES ERJ2GEJ 182 X (1.8K)	B	14.8/28.5
R510	7030008400	S.RES ERJ2GEJ 182 X (1.8K)	B	55.6/28.5
R513	7030010040	S.RES ERJ2GEJ-JPW	B	9.1/31.2
R514	7030010040	S.RES ERJ2GEJ-JPW	B	52.5/28.5
R515	7030005000	S.RES ERJ2GEJ 471 X (470)	T	81.6/8.1
R516	7030005000	S.RES ERJ2GEJ 471 X (470)	T	82.8/18.1
R517	7030008010	S.RES ERJ2GEJ 123 X (12K)	B	95.7/31.3
R518	7030008010	S.RES ERJ2GEJ 123 X (12K)	B	95.4/36.9
R519	7030005220	S.RES ERJ2GEJ 223 X (22K)	B	95.7/32.2
R520	7030005220	S.RES ERJ2GEJ 223 X (22K)	B	95.4/36.0
R521	7030004980	S.RES ERJ2GEJ 101 X (100)	T	17.6/25.9
R522	7030005240	S.RES ERJ2GEJ 473 X (47K)	T	19.0/26.6
R523	7030004980	S.RES ERJ2GEJ 101 X (100)	T	58.2/30.9
R524	7030005240	S.RES ERJ2GEJ 473 X (47K)	T	59.4/30.4
R525	7030005530	S.RES ERJ2GEJ 100 X (10)	B	12.2/37.7
R526	7030005220	S.RES ERJ2GEJ 223 X (22K)	T	12.3/34.6
R527	7030005530	S.RES ERJ2GEJ 100 X (10)	B	53.1/37.7
R528	7030005220	S.RES ERJ2GEJ 223 X (22K)	T	53.2/34.6
R529	7030007320	S.RES ERJ2GEJ 225 X (2.2M)	B	9.2/33.5
R530	7030007320	S.RES ERJ2GEJ 225 X (2.2M)	B	50.1/33.5
R531	7030007290	S.RES ERJ2GEJ 222 X (2.2K)	T	13.5/37.4
R532	7030007290	S.RES ERJ2GEJ 222 X (2.2K)	T	54.4/37.4
R533	7030005530	S.RES ERJ2GEJ 100 X (10)	B	12.6/38.9
R534	7030005530	S.RES ERJ2GEJ 100 X (10)	B	53.6/38.9
R539	7030005170	S.RES ERJ2GEJ 474 X (470K)	T	14.7/35.4
R540	7030005170	S.RES ERJ2GEJ 474 X (470K)	T	55.7/35.4
R541	7030007290	S.RES ERJ2GEJ 222 X (2.2K)	T	14.7/37.2
R542	7030010040	S.RES ERJ2GEJ-JPW	T	15.9/36.7
R543	7030007290	S.RES ERJ2GEJ 222 X (2.2K)	T	55.7/37.2
R544	7030010040	S.RES ERJ2GEJ-JPW	T	56.9/36.7
R545	7030004970	S.RES ERJ2GEJ 470 X (47)	T	8.8/33.1
R546	7030004970	S.RES ERJ2GEJ 470 X (47)	T	49.9/33.1
R548	7030005120	S.RES ERJ2GEJ 102 X (1K)	T	118.0/29.8
R549	7030005170	S.RES ERJ2GEJ 474 X (470K)	T	119.2/29.4
R551	7030005120	S.RES ERJ2GEJ 102 X (1K)	T	113.4/32.6
R552	7030005170	S.RES ERJ2GEJ 474 X (470K)	T	114.6/32.2
R553	7030005090	S.RES ERJ2GEJ 104 X (100K)	T	121.7/31.5
R554	7030005090	S.RES ERJ2GEJ 104 X (100K)	T	117.1/34.5
R557	7030005120	S.RES ERJ2GEJ 102 X (1K)	T	121.7/29.9
R558	7030005120	S.RES ERJ2GEJ 102 X (1K)	T	117.1/32.9
R559	7030005000	S.RES ERJ2GEJ 471 X (470)	T	13.2/44.1
R560	7030004990	S.RES ERJ2GEJ 221 X (220)	T	14.8/41.3
R561	7030005720	S.RES ERJ2GEJ 563 X (56K)	T	120.5/28.9
R562	7030005000	S.RES ERJ2GEJ 471 X (470)	T	54.2/44.1
R563	7030004990	S.RES ERJ2GEJ 221 X (220)	T	55.8/40.5
R564	7030005720	S.RES ERJ2GEJ 563 X (56K)	T	115.9/31.7
R567	7030005530	S.RES ERJ2GEJ 100 X (10)	T	9.7/40.3
R568	7030005530	S.RES ERJ2GEJ 100 X (10)	T	50.7/40.3
R569	7030005090	S.RES ERJ2GEJ 104 X (100K)	T	120.4/33.6
R570	7030005090	S.RES ERJ2GEJ 104 X (100K)	T	115.4/36.4
R573	7030005100	S.RES ERJ2GEJ 154 X (150K)	T	11.6/44.1
R574	7030005100	S.RES ERJ2GEJ 154 X (150K)	T	52.6/44.1
R575	7030005050	S.RES ERJ2GEJ 103 X (10K)	T	10.0/44.1
R576	7030005050	S.RES ERJ2GEJ 103 X (10K)	T	51.0/44.1
R577	7030008370	S.RES ERJ2GEJ 561 X (560)	T	11.7/47.8
R578	7030008370	S.RES ERJ2GEJ 561 X (560)	T	52.7/47.8
R579	7030004980	S.RES ERJ2GEJ 101 X (100)	T	13.3/58.6
R580	7030005530	S.RES ERJ2GEJ 100 X (10)	T	55.0/58.6
R582	7030007280	S.RES ERJ2GEJ 331 X (330)	T	18.6/73.7
R583	7030005090	S.RES ERJ2GEJ 104 X (100K)	T	22.1/70.4
R584	7030005090	S.RES ERJ2GEJ 104 X (100K)	T	22.6/66.4
R585	7030005070	S.RES ERJ2GEJ 683 X (68K)	T	21.2/71.3
R586	7030005080	S.RES ERJ2GEJ 823 X (82K)	T	21.2/66.9
R588	7030007270	S.RES ERJ2GEJ 151 X (150)	T	19.5/66.0
R589	7030009140	S.RES ERJ2GEJ 272 X (2.7K)	T	19.0/72.5
R592	7030007280	S.RES ERJ2GEJ 331 X (330)	T	63.2/65.2
R593	7030005030	S.RES ERJ2GEJ 152 X (1.5K)	T	61.7/64.9
R594	7030005040	S.RES ERJ2GEJ 472 X (4.7K)	T	61.6/64.0
R595	7030005070	S.RES ERJ2GEJ 683 X (68K)	T	59.8/72.1
R596	7030005080	S.RES ERJ2GEJ 823 X (82K)	T	61.0/72.0
R598	7030007270	S.RES ERJ2GEJ 151 X (150)	T	62.2/69.6
R599	7030005090	S.RES ERJ2GEJ 104 X (100K)	T	58.9/74.1
R601	7030005040	S.RES ERJ2GEJ 472 X (4.7K)	T	17.0/65.1
R602	7030005090	S.RES ERJ2GEJ 104 X (100K)	T	61.9/72.0
R603	7030005090	S.RES ERJ2GEJ 104 X (100K)	T	28.0/2.8
R604	7030005040	S.RES ERJ2GEJ 472 X (4.7K)	T	26.8/13.4
R605	7030005090	S.RES ERJ2GEJ 104 X (100K)	T	126.3/72.8
R606	7030005090	S.RES ERJ2GEJ 104 X (100K)	T	124.5/72.8
R607	7030005220	S.RES ERJ2GEJ 223 X (22K)	T	105.1/9.6
R608	7030005070	S.RES ERJ2GEJ 683 X (68K)	T	105.1/8.7
R609	7030005100	S.RES ERJ2GEJ 154 X (150K)	T	109.8/11.1
R610	7030007350	S.RES ERJ2GEJ 393 X (39K)	T	107.5/8.7
R611	7030005100	S.RES ERJ2GEJ 154 X (150K)	T	96.1/24.5

Eqv.= This component is equivalent to the REF No. component listed above, and may be substituted on parts orders and repairs.

M.=Mounted side (T: Mounted on the Top side, B: Mounted on the Bottom side)
S.=Surface mount

[MAIN UNIT]

REF NO.	PARTS NO.	DESCRIPTION	M.	H/V LOCATION
R612	7030005090	S.RES ERJ2GEJ 104 X (100K)	T	97.9/25.6
R613	7030007290	S.RES ERJ2GEJ 222 X (2.2K)	T	100.9/10.9
R614	7030005100	S.RES ERJ2GEJ 154 X (150K)	T	107.5/9.6
R615	7030007340	S.RES ERJ2GEJ 153 X (15K)	T	97.6/15.5
R616	7030004980	S.RES ERJ2GEJ 101 X (100)	T	90.7/12.7
R617	7030007570	S.RES ERJ2GEJ 122 X (1.2K)	B	108.1/59.3
R618	7030005090	S.RES ERJ2GEJ 104 X (100K)	B	105.5/61.3
R619	7030005030	S.RES ERJ2GEJ 152 X (1.5K)	B	104.2/59.8
R620	7030004980	S.RES ERJ2GEJ 101 X (100)	B	103.8/58.0
R627	7030008410	S.RES ERJ2GEJ 392 X (3.9K)	T	109.2/5.1
R628	7030005090	S.RES ERJ2GEJ 104 X (100K)	T	110.5/12.5
R632	7030007350	S.RES ERJ2GEJ 393 X (39K)	T	109.2/6.0
R637	7030005600	S.RES ERJ2GEJ 273 X (27K)	T	96.1/25.6
R640	7030005220	S.RES ERJ2GEJ 223 X (22K)	T	100.0/25.7
R643	7030005100	S.RES ERJ2GEJ 154 X (150K)	T	100.3/24.5
R644	7030005050	S.RES ERJ2GEJ 103 X (10K)	T	110.5/6.4
R645	7030007350	S.RES ERJ2GEJ 393 X (39K)	T	107.5/6.9
R660	7030010040	S.RES ERJ2GEJ-JPW	T	101.1/12.8
R664	7030010040	S.RES ERJ2GEJ-JPW	T	99.1/25.1
R665	7030007280	S.RES ERJ2GEJ 331 X (330)	T	12.7/67.9
R666	7030009140	S.RES ERJ2GEJ 272 X (2.7K)	T	13.9/67.5
R667	7030005070	S.RES ERJ2GEJ 683 X (68K)	T	13.3/74.7
R668	7030005080	S.RES ERJ2GEJ 823 X (82K)	T	14.6/74.7
R669	7030007270	S.RES ERJ2GEJ 151 X (150)	T	12.0/72.6
R670	7030005090	S.RES ERJ2GEJ 104 X (100K)	T	12.1/74.2
R671	7030005090	S.RES ERJ2GEJ 104 X (100K)	T	15.5/74.7
R672	7030007280	S.RES ERJ2GEJ 331 X (330)	T	57.9/65.2
R673	7030005030	S.RES ERJ2GEJ 152 X (1.5K)	T	56.3/65.8
R674	7030005070	S.RES ERJ2GEJ 683 X (68K)	T	54.3/71.7
R675	7030005080	S.RES ERJ2GEJ 823 X (82K)	T	56.1/71.7
R676	7030007270	S.RES ERJ2GEJ 151 X (150)	T	57.1/69.6
R677	7030005090	S.RES ERJ2GEJ 104 X (100K)	T	53.6/70.3
R678	7030005090	S.RES ERJ2GEJ 104 X (100K)	T	57.3/70.8
R680	7030007340	S.RES ERJ2GEJ 153 X (15K)	T	112.3/16.4
R681	7030005240	S.RES ERJ2GEJ 473 X (47K)	T	119.1/79.6
R682	7030005240	S.RES ERJ2GEJ 473 X (47K)	T	125.3/79.1
R683	7030004990	S.RES ERJ2GEJ 221 X (220)	T	102.0/58.1
R684	7030005710	S.RES ERJ2GEJ 121 X (120)	B	102.3/57.6
R700	7030005160	S.RES ERJ2GEJ 105 X (1M)	B	80.3/11.7
R701	7030009150	S.RES ERJ2GEJ 824 X (820K)	B	78.2/11.2
R702	7030005160	S.RES ERJ2GEJ 105 X (1M)	B	77.3/12.8
R703	7410001220	S.ARR EXB28V103JX	T	112.5/41.4
R704	7030005530	S.RES ERJ2GEJ 100 X (10)	B	70.7/26.8
R705	7030007060	S.RES ERJ2GEJ 684X (680K)	B	70.0/25.6
R706	7030005050	S.RES ERJ2GEJ 103 X (10K)	B	71.2/15.2
R707	7030005600	S.RES ERJ2GEJ 273 X (27K)	B	89.4/19.1
R708	7030005240	S.RES ERJ2GEJ 473 X (47K)	B	89.4/20.3
R709	7030005120	S.RES ERJ2GEJ 102 X (1K)	B	84.7/24.0
R710	7030005050	S.RES ERJ2GEJ 103 X (10K)	B	84.7/22.2
R711	7030004980	S.RES ERJ2GEJ 101 X (100)	B	74.1/16.8
R712	7030007250	S.RES ERJ2GEJ 220 X (22)	B	75.7/23.9
R713	7030010040	S.RES ERJ2GEJ-JPW	B	75.9/21.1
R714	7030010040	S.RES ERJ2GEJ-JPW	B	77.8/22.1
R715	7030010040	S.RES ERJ2GEJ-JPW	B	77.8/21.1
R716	7030005580	S.RES ERJ2GEJ 560 X (56)	B	73.3/26.6
R717	7030009280	S.RES ERJ2GEJ 391 X	B	80.3/22.1
R718	7030005050	S.RES ERJ2GEJ 103 X (10K)	B	83.5/24.2
R719	7030009270	S.RES ERJ2GEJ 821 X (820)	B	83.5/22.6
R722	7030008370	S.RES ERJ2GEJ 561 X (560)	B	84.7/23.1
R726	7030007300	S.RES ERJ2GEJ 332 X (3.3K)	B	84.6/39.3
R727	7030005240	S.RES ERJ2GEJ 473 X (47K)	T	88.5/32.4
R728	7030005240	S.RES ERJ2GEJ 473 X (47K)	T	82.1/34.6
R729	7030005120	S.RES ERJ2GEJ 102 X (1K)	T	86.9/32.4
R730	7030005040	S.RES ERJ2GEJ 472 X (4.7K)	T	87.4/30.0
R731	7030005120	S.RES ERJ2GEJ 102 X (1K)	T	82.1/33.7
R732	7030005040	S.RES ERJ2GEJ 472 X (4.7K)	T	81.6/31.1
R733	7030005820	S.RES RR0510P-103-D (10K)	T	85.0/32.4
R734	7030005820	S.RES RR0510P-103-D (10K)	T	79.3/26.7
R735	7030005820	S.RES RR0510P-103-D (10K)	T	85.0/35.2
R736	7030005040	S.RES ERJ2GEJ 472 X (4.7K)	B	87.0/36.1
R737	7030005040	S.RES ERJ2GEJ 472 X (4.7K)	B	85.7/32.5
R738	7030004970	S.RES ERJ2GEJ 470 X (47)	T	88.3/35.4
R739	7030008280	S.RES ERJ2GEJ 271 X (270)	T	88.7/34.5
R740	7030005820	S.RES RR0510P-103-D (10K)	T	79.0/28.0
R741	7030005240	S.RES ERJ2GEJ 473 X (47K)	B	85.7/35.7
R742	7030004970	S.RES ERJ2GEJ 470 X (47)	T	76.9/28.7
R743	7030009270	S.RES ERJ2GEJ 821 X (820)	T	80.6/31.0
R744	7030005240	S.RES ERJ2GEJ 473 X (47K)	B	85.7/34.1
R745	7030007340	S.RES ERJ2GEJ 153 X (15K)	T	89.2/37.6
R746	7030005040	S.RES ERJ2GEJ 472 X (4.7K)	T	90.0/38.8
R747	7030005000	S.RES ERJ2GEJ 471 X (470)	T	75.1/28.0
R748	7030005000	S.RES ERJ2GEJ 471 X (470)	T	85.9/37.6
R749	7030005050	S.RES ERJ2GEJ 103 X (10K)	T	78.3/33.9
R750	7030007290	S.RES ERJ2GEJ 222 X (2.2K)	T	80.1/35.3
R751	7030005240	S.RES ERJ2GEJ 473 X (47K)	T	76.1/30.5
R752	7030005050	S.RES ERJ2GEJ 103 X (10K)	T	73.5/32.1
R753	7030005120	S.RES ERJ2GEJ 102 X (1K)	T	76.3/32.9
R754	7030005040	S.RES ERJ2GEJ 472 X (4.7K)	T	75.8/34.3
R755	7030005040	S.RES ERJ2GEJ 472 X (4.7K)	T	82.3/39.0
R756	7030009160	S.RES ERJ2GEJ 181 X (180)	T	73.4/35.2
R757	7030005040	S.RES ERJ2GEJ 472 X (4.7K)	T	73.8/38.1
R761	7030005220	S.RES ERJ2GEJ 223 X (22K)	B	75.9/22.1
R763	7030005120	S.RES ERJ2GEJ 102 X (1K)	B	68.9/17.9
R765	7030005220	S.RES ERJ2GEJ 223 X (22K)	B	68.9/15.7
R771	7030009150	S.RES ERJ2GEJ 824 X (820K)	B	40.2/13.3
R772	7030005000	S.RES ERJ2GEJ 471 X (470)	T	111.6/11.1
R773	7030008370	S.RES ERJ2GEJ 561 X (560)	T	64.9/53.8
R774	7030007340	S.RES ERJ2GEJ 153 X (15K)	T	110.5/16.4
R775	7030005040	S.RES ERJ2GEJ 472 X (4.7K)	T	69.5/58.3
R777	7030005040	S.RES ERJ2GEJ 472 X (4.7K)	T	62.8/55.4
R780	7030005050	S.RES ERJ2GEJ 103 X (10K)	B	79.1/12.1
R782	7030005160	S.RES ERJ2GEJ 105 X (1M)	B	40.6/14.6
R783	7030005160	S.RES ERJ2GEJ 105 X (1M)	B	39.3/15.0
R784	7030005120	S.RES ERJ2GEJ 102 X (1K)	B	29.0/16.2
R785	7030005530	S.RES ERJ2GEJ 100 X (10)	B	29.4/27.0

[MAIN UNIT]

REF NO.	PARTS NO.	DESCRIPTION	M.	H/V LOCATION
R786	7030007060	S.RES ERJ2GEJ 684X (680K)	B	28.9/25.8
R787	7030005050	S.RES ERJ2GEJ 103 X (10K)	B	33.6/15.0
R788	7030005220	S.RES ERJ2GEJ 223 X (22K)	B	28.1/15.0
R789	7030005600	S.RES ERJ2GEJ 273 X (27K)	B	47.2/20.8
R790	7030005240	S.RES ERJ2GEJ 473 X (47K)	B	47.2/22.4
R791	7030005120	S.RES ERJ2GEJ 102 X (1K)	B	44.9/26.1
R792	7030005050	S.RES ERJ2GEJ 103 X (10K)	B	45.2/21.1
R793	7030004980	S.RES ERJ2GEJ 101 X (100)	B	35.2/18.8
R794	7030007250	S.RES ERJ2GEJ 220 X (22)	B	34.6/23.5
R795	7030010040	S.RES ERJ2GEJ-JPW	B	34.9/20.9
R796	7030010040	S.RES ERJ2GEJ-JPW	B	37.5/23.3
R797	7030010040	S.RES ERJ2GEJ-JPW	B	37.5/22.4
R798	7030005580	S.RES ERJ2GEJ 560 X (56)	B	32.6/26.2
R799	7030009280	S.RES ERJ2GEJ 391 X	B	41.8/23.0
R800	7030005050	S.RES ERJ2GEJ 103 X (10K)	T	78.5/15.2
R801	7030005050	S.RES ERJ2GEJ 103 X (10K)	B	43.3/25.6
R802	7030009270	S.RES ERJ2GEJ 821 X (820)	B	43.1/21.8
R805	7030008370	S.RES ERJ2GEJ 561 X (560)	B	44.0/21.8
R806	7030007300	S.RES ERJ2GEJ 332 X (3.3K)	B	42.4/29.3
R810	7030007300	S.RES ERJ2GEJ 332 X (3.3K)	B	40.6/35.6
R811	7030007320	S.RES ERJ2GEJ 225 X (2.2M)	T	39.7/27.1
R812	7030007320	S.RES ERJ2GEJ 225 X (2.2M)	T	77.2/25.4
R813	7030005090	S.RES ERJ2GEJ 104 X (100K)	T	40.9/27.6
R814	7030005090	S.RES ERJ2GEJ 104 X (100K)	T	78.8/25.4
R815	7030005240	S.RES ERJ2GEJ 473 X (47K)	T	44.1/35.7
R816	7030005240	S.RES ERJ2GEJ 473 X (47K)	T	37.4/33.5
R817	7030005120	S.RES ERJ2GEJ 102 X (1K)	T	42.5/35.7
R818	7030005120	S.RES ERJ2GEJ 102 X (1K)	T	35.8/33.5
R819	7030005040	S.RES ERJ2GEJ 472 X (4.7K)	T	43.1/33.3
R820	7030005040	S.RES ERJ2GEJ 472 X (4.7K)	T	35.9/31.1
R821	7030005040	S.RES ERJ2GEJ 472 X (4.7K)	B	43.6/32.5
R822	7030005040	S.RES ERJ2GEJ 472 X (4.7K)	B	43.6/30.9
R823	7030005240	S.RES ERJ2GEJ 473 X (47K)	B	42.7/32.5
R824	7030005820	S.RES RR0510P-103-D (10K)	T	40.5/35.7
R825	7030005240	S.RES ERJ2GEJ 473 X (47K)	B	42.7/30.9
R826	7030005820	S.RES RR0510P-103-D (10K)	T	33.7/26.3
R827	7030005820	S.RES RR0510P-103-D (10K)	T	40.5/38.4
R828	7030005820	S.RES RR0510P-103-D (10K)	T	33.2/27.5
R829	7030004970	S.RES ERJ2GEJ 470 X (47)	T	43.8/38.7
R830	7030008280	S.RES ERJ2GEJ 271 X (270)	T	44.3/37.8
R831	7030004970	S.RES ERJ2GEJ 470 X (47)	T	32.8/26.3
R832	7030009270	S.RES ERJ2GEJ 821 X (820)	T	34.7/31.0
R833	7030007340	S.RES ERJ2GEJ 153 X (15K)	T	37.6/37.0
R834	7030005040	S.RES ERJ2GEJ 472 X (4.7K)	T	38.9/38.9
R835	7030005000	S.RES ERJ2GEJ 471 X (470)	T	30.5/29.2
R836	7030005050	S.RES ERJ2GEJ 103 X (10K)	T	31.4/35.2
R837	7030007290	S.RES ERJ2GEJ 222 X (2.2K)	T	32.8/33.3
R838	7030005000	S.RES ERJ2GEJ 471 X (470)	T	35.2/36.8
R839	7030005240	S.RES ERJ2GEJ 473 X (47K)	T	30.5/31.7
R840	7030005120	S.RES ERJ2GEJ 102 X (1K)	T	30.5/35.2
R841	7030005050	S.RES ERJ2GEJ 103 X (10K)	T	28.9/33.7
R842	7030005040	S.RES ERJ2GEJ 472 X (4.7K)	T	29.8/37.9
R843	7030005040	S.RES ERJ2GEJ 472 X (4.7K)	T	34.4/37.7
R844	7030009160	S.RES ERJ2GEJ 181 X (180)	T	28.6/37.4
R845	7030005040	S.RES ERJ2GEJ 472 X (4.7K)	T	28.6/39.5
R846	7030005530	S.RES ERJ2GEJ 100 X (10)	T	22.7/58.6
R847	7030010040	S.RES ERJ2GEJ-JPW	T	20.6/53.9
R848	7030010040	S.RES ERJ2GEJ-JPW	T	60.6/53.6
R849	7030005530	S.RES ERJ2GEJ 100 X (10)	T	62.6/58.7
R852	7030008370	S.RES ERJ2GEJ 561 X (560)	T	24.6/53.6
R853	7030005040	S.RES ERJ2GEJ 472 X (4.7K)	T	23.0/55.3
R854	7030005040	S.RES ERJ2GEJ 472 X (4.7K)	T	29.0/54.3
R856	7030005050	S.RES ERJ2GEJ 103 X (10K)	B	43.6/29.0
R857	7030005050	S.RES ERJ2GEJ 103 X (10K)	T	78.2/17.1
R858	7030005090	S.RES ERJ2GEJ 104 X (100K)	T	80.2/18.0
R859	7030008310	S.RES ERJ2GEJ 564 X (560K)	B	40.6/15.5
R860	7030010040	S.RES ERJ2GEJ-JPW	T	73.1/25.9
R861	7030010040	S.RES ERJ2GEJ-JPW	T	29.8/25.7
R862	7030004980	S.RES ERJ2GEJ 101 X (100)	T	88.3/30.0
R863	7030010040	S.RES ERJ2GEJ-JPW	T	45.0/34.8
R864	7410001140	S.ARR EXB28V104JX	T	110.2/44.2
R865	7030005070	S.RES ERJ2GEJ 683 X (68K)	B	69.3/20.1
R866	7030005070	S.RES ERJ2GEJ 683 X (68K)	B	28.1/17.8
R867	7030005220	S.RES ERJ2GEJ 223 X (22K)	B	34.9/22.2
R868	7030005050	S.RES ERJ2GEJ 103 X (10K)	T	70.5/11.9
R869	7030005080	S.RES ERJ2GEJ 823 X (82K)	T	71.0/10.2
R870	7030007320	S.RES ERJ2GEJ 225 X (2.2M)	T	72.6/13.7
R871	7030005050	S.RES ERJ2GEJ 103 X (10K)	T	23.2/48.2
R872	7030008410	S.RES ERJ2GEJ 392 X (3.9K)	T	23.2/47.3
R873	7030005710	S.RES ERJ2GEJ 121 X (120)	T	27.4/48.5
R874	7030005050	S.RES ERJ2GEJ 103 X (10K)	T	21.0/48.2
R875	7030005710	S.RES ERJ2GEJ 121 X (120)	T	20.1/48.2
R876	7030008410	S.RES ERJ2GEJ 392 X (3.9K)	T	21.5/49.4
R877	7030005710	S.RES ERJ2GEJ 121 X (120)	T	60.9/48.2
R878	7030008410	S.RES ERJ2GEJ 392 X (3.9K)	T	62.2/49.4
R879	7030005050	S.RES ERJ2GEJ 103 X (10K)	T	64.0/48.2
R880	7030008410	S.RES ERJ2GEJ 392 X (3.9K)	T	64.0/47.3
R881	7030005050	S.RES ERJ2GEJ 103 X (10K)	T	61.8/48.2
R882	7030005710	S.RES ERJ2GEJ 121 X (120)	T	68.1/48.5
R883	7030010040	S.RES ERJ2GEJ-JPW	T	67.4/53.0
R884	7030010040	S.RES ERJ2GEJ-JPW	T	68.6/54.1
R885	7030010040	S.RES ERJ2GEJ-JPW	T	26.6/53.0
R886	7030010040	S.RES ERJ2GEJ-JPW	T	27.8/53.9
R887	7030010040	S.RES ERJ2GEJ-JPW	T	63.6/50.1
R888	7030010040	S.RES ERJ2GEJ-JPW	T	23.2/50.2
R910	7030005040	S.RES ERJ2GEJ 472 X (4.7K)	T	115.7/45.3
R911	7030005040	S.RES ERJ2GEJ 472 X (4.7K)	T	116.6/45.3
R915	7410001220	S.ARR EXB28V103JX	T	135.7/50.7
R931	7030005090	S.RES ERJ2GEJ 104 X (100K)	T	135.9/44.8
R932	7030005090	S.RES ERJ2GEJ 104 X (100K)	T	133.3/25.1
R934	7030005040	S.RES ERJ2GEJ 472 X (4.7K)	T	135.9/43.6
R943	7030005160	S.RES ERJ2GEJ 105 X (1M)	B	132.0/49.1
R951	7030005090	S.RES ERJ2GEJ 104 X (100K)	B	134.8/43.5
R955	7030005220	S.RES ERJ2GEJ 223 X (22K)	B	133.0/43.5
R991	7030005720	S.RES ERJ2GEJ 563 X (56K)	T	126.3/28.3

Eqv.= This component is equivalent to the REF No. component listed above, and may be substituted on parts orders and repairs.

M.=Mounted side (T: Mounted on the Top side, B: Mounted on the Bottom side)
S.=Surface mount

[MAIN UNIT]

REF NO.	PARTS NO.	DESCRIPTION	M.	H/V LOCATION
R992	7030005090	S.RES ERJ2GEJ 104 X (100K)	T	124.8/23.0
R994	7030005090	S.RES ERJ2GEJ 104 X (100K)	T	123.2/23.9
R997	7030005090	S.RES ERJ2GEJ 104 X (100K)	T	124.7/28.3
R998	7030005090	S.RES ERJ2GEJ 104 X (100K)	T	56.0/4.2
R999	7030005090	S.RES ERJ2GEJ 104 X (100K)	T	50.6/14.5
R1000	7030005100	S.RES ERJ2GEJ 154 X (150K)	B	114.2/75.6
R1001	7030005160	S.RES ERJ2GEJ 105 X (1M)	B	112.8/75.2
R1002	7030012690	S.RES ERJM1WSF3M0U	T	94.5/86.0
R1003	7030005050	S.RES ERJ2GEJ 103 X (10K)	T	136.4/57.0
R1005	7030004980	S.RES ERJ2GEJ 101 X (100)	B	116.0/72.7
R1011	7030010040	S.RES ERJ2GEJ-JPW	B	116.0/68.4
R1012	7030005240	S.RES ERJ2GEJ 473 X (47K)	T	103.1/98.5
R1013	7030005090	S.RES ERJ2GEJ 104 X (100K)	T	117.9/66.6
R1016	7030005090	S.RES ERJ2GEJ 104 X (100K)	T	123.2/68.2
R1017	7030005240	S.RES ERJ2GEJ 473 X (47K)	T	122.1/66.9
R1018	7030000350	S.RES MCR10EZHJ 560 (561)	T	100.4/100.3
R1019	7030000350	S.RES MCR10EZHJ 560 (561)	T	109.6/104.1
R1020	7030005820	S.RES RR0510P-103-D (10K)	T	125.5/66.7
R1021	7030011880	S.RES RR0510P-183-D (18K)	T	127.3/67.6
R1022	7030008010	S.RES ERJ2GEJ 123 X (12K)	T	124.9/68.2
R1023	7510001770	S.THE NTCG10 4LH 473JT	T	98.7/66.6
R1024	7030007350	S.RES ERJ2GEJ 393 X (39K)	T	97.8/65.0
R1031	7030005240	S.RES ERJ2GEJ 473 X (47K)	T	111.3/102.8
R1033	7030005090	S.RES ERJ2GEJ 104 X (100K)	T	132.6/27.9
R1036	7030005090	S.RES ERJ2GEJ 104 X (100K)	T	41.6/13.7
R1037	7030005120	S.RES ERJ2GEJ 102 X (1K)	T	47.9/13.6
R1038	7030005120	S.RES ERJ2GEJ 102 X (1K)	T	48.8/13.6
R1039	7030010040	S.RES ERJ2GEJ-JPW	B	110.4/67.6
R1040	7030005120	S.RES ERJ2GEJ 102 X (1K)	T	49.7/13.6
R1041	7030005120	S.RES ERJ2GEJ 102 X (1K)	T	55.0/13.7
R1042	7030005120	S.RES ERJ2GEJ 102 X (1K)	T	49.3/4.3
R1043	7030005120	S.RES ERJ2GEJ 102 X (1K)	T	50.2/4.3
R1044	7030005120	S.RES ERJ2GEJ 102 X (1K)	T	51.1/4.3
R1045	7030005120	S.RES ERJ2GEJ 102 X (1K)	T	52.4/7.5
R1046	7030005120	S.RES ERJ2GEJ 102 X (1K)	T	48.3/45.8
R1047	7030005120	S.RES ERJ2GEJ 102 X (1K)	T	46.6/45.2
R1080	7030005240	S.RES ERJ2GEJ 473 X (47K)	T	130.5/17.3
R1082	7030005240	S.RES ERJ2GEJ 473 X (47K)	B	136.0/21.5
R1084	7030008310	S.RES ERJ2GEJ 564 X (560K)	B	114.5/74.1
R1085	7030009150	S.RES ERJ2GEJ 824 X (820K)	B	117.0/73.2
R1086	7030010040	S.RES ERJ2GEJ-JPW	T	127.8/25.1
R1087	7030010040	S.RES ERJ2GEJ-JPW	T	127.4/17.8
R1088	7030005040	S.RES ERJ2GEJ 472 X (4.7K)	T	113.6/45.6
R1089	7030005040	S.RES ERJ2GEJ 472 X (4.7K)	T	113.6/46.5
R1090	7030005050	S.RES ERJ2GEJ 103 X (10K)	T	114.7/50.2
R1091	7030005120	S.RES ERJ2GEJ 102 X (1K)	T	115.9/50.7
R1092	7030005050	S.RES ERJ2GEJ 103 X (10K)	T	114.7/51.1
R1093	7030005240	S.RES ERJ2GEJ 473 X (47K)	T	112.5/50.7
R1094	7030005050	S.RES ERJ2GEJ 103 X (10K)	T	113.4/50.7
R1095	7030005090	S.RES ERJ2GEJ 104 X (100K)	B	131.3/55.9
R1096	7410001130	S.ARR EXB28V102JX	B	128.9/62.9
R1097	7030005120	S.RES ERJ2GEJ 102 X (1K)	B	126.4/62.9
R1098	7030005120	S.RES ERJ2GEJ 102 X (1K)	B	125.5/62.9
R1099	7410001130	S.ARR EXB28V102JX	B	122.9/62.9
R1100	7030005120	S.RES ERJ2GEJ 102 X (1K)	B	120.4/63.0
R1101	7030005120	S.RES ERJ2GEJ 102 X (1K)	B	119.4/63.0
R1102	7030005240	S.RES ERJ2GEJ 473 X (47K)	B	111.4/53.0
R1103	7410001140	S.ARR EXB28V104JX	B	110.8/55.5
R1104	7410001140	S.ARR EXB28V104JX	B	116.3/60.3
R1105	7410001140	S.ARR EXB28V104JX	B	135.7/33.3
R1106	7030005090	S.RES ERJ2GEJ 104 X (100K)	B	135.9/39.2
R1109	7030005090	S.RES ERJ2GEJ 104 X (100K)	T	46.6/3.4
R1110	7030005090	S.RES ERJ2GEJ 104 X (100K)	T	47.5/3.4
R1111	7030005090	S.RES ERJ2GEJ 104 X (100K)	T	48.4/3.4
R1112	7030005240	S.RES ERJ2GEJ 473 X (47K)	T	130.5/18.2
R1114	7030005090	S.RES ERJ2GEJ 104 X (100K)	B	111.4/49.0
R1115	7030005090	S.RES ERJ2GEJ 104 X (100K)	B	132.0/55.0
R1116	7030005090	S.RES ERJ2GEJ 104 X (100K)	T	127.9/29.2
R1117	7030010040	S.RES ERJ2GEJ-JPW	T	122.8/14.8
R1118	7030000320	S.RES MCR10EZHJ 330 (331)	T	106.7/106.1
R1119	7030010040	S.RES ERJ2GEJ-JPW	B	135.2/51.3
R1120	7030005120	S.RES ERJ2GEJ 102 X (1K)	T	129.1/12.4
R1121	7030010040	S.RES ERJ2GEJ-JPW	T	128.1/12.4
R1122	7030005120	S.RES ERJ2GEJ 102 X (1K)	T	59.0/8.0
R1124	7030005090	S.RES ERJ2GEJ 104 X (100K)	T	129.8/25.1
C1	4030017460	S.CER C1005 JB 1H 102K-T	T	22.4/90.7
C2	4030017460	S.CER C1005 JB 1H 102K-T	T	16.9/83.3
C5	4030017650	S.CER C1005 CH 1H 270J-T	T	44.0/89.3
C6	4030017460	S.CER C1005 JB 1H 102K-T	T	43.9/86.4
C8	4030017460	S.CER C1005 JB 1H 102K-T	T	18.8/92.7
C12	4030017460	S.CER C1005 JB 1H 102K-T	T	47.8/87.3
C15	4030017460	S.CER C1005 JB 1H 102K-T	T	18.5/89.8
C16	4030017460	S.CER C1005 JB 1H 102K-T	T	20.8/84.3
C22	4030017460	S.CER C1005 JB 1H 102K-T	T	49.4/85.4
C24	4030017460	S.CER C1005 JB 1H 102K-T	T	17.2/89.6
C25	4030017460	S.CER C1005 JB 1H 102K-T	T	22.0/84.3
C27	4030017640	S.CER C1005 CH 1H 150J-T	T	13.6/81.6
C28	4030017620	S.CER C1005 CH 1H 100C-T	T	45.8/70.0
C32	4030017350	S.CER C1005 CH 1H 020B-T	T	11.4/81.0
C33	4030017530	S.CER C1005 CH 1H 0R5B-T	T	43.6/69.3
C37	4030016930	S.CER C1005 JB 1A 104K-T	T	9.4/84.3
C39	4030016930	S.CER C1005 JB 1A 104K-T	T	39.3/65.8
C46	4030017640	S.CER C1005 CH 1H 150J-T	B	35.9/63.8
C47	4030017640	S.CER C1005 CH 1H 150J-T	T	69.7/78.1
C48	4030017460	S.CER C1005 JB 1H 102K-T	T	10.2/91.9
C50	4030016930	S.CER C1005 JB 1A 104K-T	T	9.4/85.2
C51	4030017460	S.CER C1005 JB 1H 102K-T	T	28.2/74.3
C53	4030016930	S.CER C1005 JB 1A 104K-T	T	37.6/66.1
C57	4030017430	S.CER C1005 CH 1H 101J-T	B	39.5/60.5
C60	4030017430	S.CER C1005 CH 1H 101J-T	T	73.6/80.6
C62	4030017460	S.CER C1005 JB 1H 102K-T	T	11.8/91.1
C63	4030017600	S.CER C1005 CH 1H 080C-T	T	14.4/88.5
C64	4030017460	S.CER C1005 JB 1H 102K-T	T	30.5/78.5

[MAIN UNIT]

REF NO.	PARTS NO.	DESCRIPTION	M.	H/V LOCATION
C65	4030017600	S.CER C1005 CH 1H 080C-T	T	34.6/71.3
C66	4030017580	S.CER C1005 CH 1H 060C-T	T	12.4/92.3
C67	4030017580	S.CER C1005 CH 1H 060C-T	T	34.1/69.9
C68	4030017460	S.CER C1005 JB 1H 102K-T	T	70.8/73.1
C69	4030017530	S.CER C1005 CH 1H 0R5B-T	B	41.0/63.4
C70	4030017660	S.CER C1005 CH 1H 330J-T	B	41.0/62.5
C71	4030017530	S.CER C1005 CH 1H 0R5B-T	T	69.7/82.2
C74	4030017660	S.CER C1005 CH 1H 330J-T	T	73.6/82.2
C75	4030017460	S.CER C1005 JB 1H 102K-T	T	12.4/94.1
C76	4030017460	S.CER C1005 JB 1H 102K-T	T	31.4/78.5
C77	4030017430	S.CER C1005 CH 1H 101J-T	B	42.4/60.4
C79	4030017430	S.CER C1005 CH 1H 101J-T	T	73.6/83.8
C83	4030017460	S.CER C1005 JB 1H 102K-T	T	53.3/82.4
C84	4030017460	S.CER C1005 JB 1H 102K-T	T	51.7/79.9
C85	4030017460	S.CER C1005 JB 1H 102K-T	T	74.5/87.5
C86	4030017460	S.CER C1005 JB 1H 102K-T	T	69.7/84.4
C87	4030017460	S.CER C1005 JB 1H 102K-T	T	68.9/89.7
C88	4030017460	S.CER C1005 JB 1H 102K-T	T	54.5/83.8
C89	4030017460	S.CER C1005 JB 1H 102K-T	T	74.5/86.6
C90	4030017460	S.CER C1005 JB 1H 102K-T	T	11.0/94.9
C91	4030017460	S.CER C1005 JB 1H 102K-T	T	29.2/79.0
C92	4030016930	S.CER C1005 JB 1A 104K-T	T	68.0/66.7
C93	4030017460	S.CER C1005 JB 1H 102K-T	T	11.0/95.8
C94	4030017580	S.CER C1005 CH 1H 060C-T	T	14.7/97.0
C95	4030017460	S.CER C1005 JB 1H 102K-T	T	27.1/78.1
C96	4030017580	S.CER C1005 CH 1H 060C-T	T	28.4/81.2
C97	4030017340	S.CER C1005 CH 1H 010B-T	T	14.3/98.2
C98	4030017340	S.CER C1005 CH 1H 010B-T	T	28.3/82.5
C101	4030017460	S.CER C1005 JB 1H 102K-T	T	54.5/84.8
C102	4030017460	S.CER C1005 JB 1H 102K-T	T	73.1/91.1
C103	4030017620	S.CER C1005 CH 1H 100C-T	T	58.1/88.0
C104	4030017620	S.CER C1005 CH 1H 100C-T	T	73.1/92.3
C105	4030017460	S.CER C1005 JB 1H 102K-T	T	52.4/82.4
C106	4030017460	S.CER C1005 JB 1H 102K-T	T	73.1/90.2
C108	4030016930	S.CER C1005 JB 1A 104K-T	T	9.8/102.6
C110	4030016930	S.CER C1005 JB 1A 104K-T	T	29.5/86.9
C116	4030017430	S.CER C1005 CH 1H 101J-T	T	55.3/93.0
C119	4030017430	S.CER C1005 CH 1H 101J-T	T	75.8/95.3
C122	4030016930	S.CER C1005 JB 1A 104K-T	T	9.8/103.5
C124	4030016930	S.CER C1005 JB 1A 104K-T	T	29.5/89.3
C125	4030017540	S.CER C1005 CH 1H R75B-T	T	58.1/94.5
C126	4030017660	S.CER C1005 CH 1H 330J-T	T	57.2/94.5
C127	4030017540	S.CER C1005 CH 1H R75B-T	T	71.9/96.9
C128	4030017660	S.CER C1005 CH 1H 330J-T	T	75.8/96.9
C132	4030017430	S.CER C1005 CH 1H 101J-T	T	55.3/96.1
C135	4030017430	S.CER C1005 CH 1H 101J-T	T	75.8/98.5
C137	4030017530	S.CER C1005 CH 1H 0R5B-T	T	14.4/104.8
C138	4030017530	S.CER C1005 CH 1H 0R5B-T	T	27.6/93.7
C139	4030017360	S.CER C1005 CH 1H 030B-T	T	21.9/105.7
C140	4030017360	S.CER C1005 CH 1H 030B-T	T	27.3/95.1
C141	4030017600	S.CER C1005 CH 1H 080C-T	T	58.1/100.6
C142	4030017600	S.CER C1005 CH 1H 080C-T	T	71.2/101.4
C143	4030017460	S.CER C1005 JB 1H 102K-T	T	20.6/107.0
C144	4030017460	S.CER C1005 JB 1H 102K-T	T	31.9/96.8
C145	4030017460	S.CER C1005 JB 1H 102K-T	T	54.3/100.9
C146	4030017460	S.CER C1005 JB 1H 102K-T	T	73.4/105.8
C147	4030017360	S.CER C1005 CH 1H 030B-T	T	23.3/104.9
C148	4030017360	S.CER C1005 CH 1H 030B-T	T	27.4/96.5
C149	4030016930	S.CER C1005 JB 1A 104K-T	T	76.7/67.8
C150	4030016930	S.CER C1005 JB 1A 104K-T	T	76.7/71.1
C151	4030017460	S.CER C1005 JB 1H 102K-T	T	18.2/107.0
C152	4030017460	S.CER C1005 JB 1H 102K-T	T	58.1/102.3
C153	4030017460	S.CER C1005 JB 1H 102K-T	T	68.4/105.4
C154	4030017460	S.CER C1005 JB 1H 102K-T	T	53.9/103.7
C155	4030017460	S.CER C1005 JB 1H 102K-T	T	74.6/103.7
C156	4030017460	S.CER C1005 JB 1H 102K-T	T	32.8/96.8
C157	4030017460	S.CER C1005 JB 1H 102K-T	T	80.2/68.5
C158	4030017460	S.CER C1005 JB 1H 102K-T	T	78.2/73.3
C163	4030017550	S.CER C1005 CH 1H 1R5B-T	T	26.1/104.8
C164	4030017460	S.CER C1005 JB 1H 102K-T	T	27.7/99.9
C167	4030017460	S.CER C1005 JB 1H 102K-T	T	62.1/111.5
C168	4030017460	S.CER C1005 JB 1H 102K-T	T	30.0/105.4
C170	4030017590	S.CER C1005 CH 1H 070C-T	T	60.9/106.9
C171	4030017460	S.CER C1005 JB 1H 102K-T	T	66.7/107.7
C172	4030017460	S.CER C1005 JB 1H 102K-T	T	29.6/101.3
C173	4030017460	S.CER C1005 JB 1H 102K-T	T	30.5/101.3
C180	4030017460	S.CER C1005 JB 1H 102K-T	T	65.4/110.4
C181	4030017460	S.CER C1005 JB 1H 102K-T	T	65.4/109.5
C182	4030017460	S.CER C1005 JB 1H 102K-T	T	32.7/102.0
C188	4030017440	S.CER C1005 CH 1H 221J-T	T	66.7/111.1
C189	4030017600	S.CER C1005 CH 1H 080C-T	T	32.1/106.5
C197	4030007040	S.CER C1608 CH 1H 180J-T	T	72.9/110.0
C208	4030017460	S.CER C1005 JB 1H 102K-T	T	91.2/48.7
C209	4030017460	S.CER C1005 JB 1H 102K-T	T	88.6/47.9
C210	4030017460	S.CER C1005 JB 1H 102K-T	T	97.0/110.2
C211	4030017460	S.CER C1005 JB 1H 102K-T	T	86.1/46.1
C212	4030017460	S.CER C1005 JB 1H 102K-T	T	22.4/88.3
C213	4030017460	S.CER C1005 JB 1H 102K-T	T	69.7/51.8
C214	4030017460	S.CER C1005 JB 1H 102K-T	T	47.9/52.6
C215	4030017390	S.CER C1005 CH 1H 180J-T	T	67.4/50.9
C216	4030017460	S.CER C1005 JB 1H 102K-T	T	102.0/115.3
C217	4030017460	S.CER C1005 JB 1H 102K-T	T	16.9/86.3
C218	4510009950	S.ELE EEEHC1C470P	T	103.8/120.2
C219	4030017460	S.CER C1005 JB 1H 102K-T	T	94.3/115.4
C220	4030017660	S.CER C1005 CH 1H 330J-T	T	69.3/49.1
C221	4030017460	S.CER C1005 JB 1H 102K-T	T	45.2/52.2
C222	4030017460	S.CER C1005 JB 1H 102K-T	T	94.7/118.2
C225	4030017390	S.CER C1005 CH 1H 180J-T	T	70.7/49.5
C226	4030017460	S.CER C1005 JB 1H 102K-T	T	71.1/48.1
C227	4030016930	S.CER C1005 JB 1A 104K-T	T	43.7/52.2
C228	4030017460	S.CER C1005 JB 1H 102K-T	T	29.6/50.9
C229	4030017460	S.CER C1005 JB 1H 102K-T	B	28.4/36.5
C230	4030017460	S.CER C1005 JB 1H 102K-T	B	29.7/38.0
C232	4030017640	S.CER C1005 CH 1H 150J-T	B	31.8/36.5
C233	4030017460	S.CER C1005 JB 1H 102K-T	B	75.3/39.3

Eqv.= This component is equivalent to the REF No. component listed above, and may be substituted on parts orders and repairs.

M.=Mounted side (T: Mounted on the Top side, B: Mounted on the Bottom side)
S.=Surface mount

[MAIN UNIT]

REF NO.	PARTS NO.	DESCRIPTION	M.	H/V LOCATION
C234	4030016930	S.CER C1005 JB 1A 104K-T	B	76.6/41.1
C235	4030017350	S.CER C1005 CH 1H 020B-T	B	75.0/38.1
C236	4030017460	S.CER C1005 JB 1H 102K-T	B	30.9/34.9
C237	4030017460	S.CER C1005 JB 1H 102K-T	B	75.7/41.1
C238	4030017460	S.CER C1005 JB 1H 102K-T	B	77.5/39.1
C239	4030017460	S.CER C1005 JB 1H 102K-T	B	33.0/35.4
C241	4030017460	S.CER C1005 JB 1H 102K-T	B	34.8/43.9
C243	4030017620	S.CER C1005 CH 1H 100C-T	B	32.5/41.1
C244	4030017650	S.CER C1005 CH 1H 270J-T	B	80.6/43.4
C245	4030017630	S.CER C1005 CH 1H 120J-T	B	82.9/44.0
C250	4030017460	S.CER C1005 JB 1H 102K-T	B	35.0/45.2
C251	4030017360	S.CER C1005 CH 1H 030B-T	B	36.7/43.9
C252	4030017460	S.CER C1005 JB 1H 102K-T	B	84.1/47.1
C257	4030017360	S.CER C1005 CH 1H 030B-T	B	39.0/44.4
C264	4030017350	S.CER C1005 CH 1H 020B-T	B	40.3/42.4
C265	4030017460	S.CER C1005 JB 1H 102K-T	B	81.9/46.7
C266	4030017460	S.CER C1005 JB 1H 102K-T	B	82.9/47.0
C267	4030017660	S.CER C1005 CH 1H 330J-T	B	88.4/49.5
C268	4030017620	S.CER C1005 CH 1H 100C-T	B	87.4/50.7
C273	4030017460	S.CER C1005 JB 1H 102K-T	B	39.2/47.5
C274	4030017390	S.CER C1005 CH 1H 180J-T	B	86.5/50.7
C280	4030017460	S.CER C1005 JB 1H 102K-T	B	37.1/46.3
C281	4030017580	S.CER C1005 CH 1H 060C-T	B	43.8/49.5
C282	4030017360	S.CER C1005 CH 1H 030B-T	B	42.8/50.7
C285	4050000280	S.FEE CTH30V222S15A-TM	B	86.6/80.5
C288	4030017460	S.CER C1005 JB 1H 102K-T	T	87.3/83.9
C291	4030021210	S.CER GRM31A5C2J150JW01D	B	83.5/89.7
C293	4030017460	S.CER C1005 JB 1H 102K-T	T	46.5/74.8
C296	4030017460	S.CER C1005 JB 1H 102K-T	T	42.9/54.6
C297	4030020770	S.CER GRM31A5C2J330JW01D	B	84.3/96.4
C299	4030017460	S.CER C1005 JB 1H 102K-T	B	40.1/55.1
C301	4030011020	S.CER GRM31M4C2H1R0CY21L (GRM42-6)	B	85.2/100.2
C302	4030021200	S.CER GRM31A5C2J120JW01D	B	80.3/100.2
C304	4030017460	S.CER C1005 JB 1H 102K-T	B	81.0/102.0
C305	4050000280	S.FEE CTH30V222S15A-TM	T	43.9/80.0
C306	4030017460	S.CER C1005 JB 1H 102K-T	B	86.0/69.2
C310	4030011020	S.CER GRM31M4C2H1R0CY21L (GRM42-6)	B	38.1/87.7
C317	4030017460	S.CER C1005 JB 1H 102K-T	B	77.7/102.9
C319	4030011070	S.CER GRM31M2C2H5R0CY21L (GRM42-6)	B	42.1/88.1
C320	4030019620	S.CER GRM188B31C225KE14D	B	87.9/68.6
C322	4030011020	S.CER GRM31M4C2H1R0CY21L (GRM42-6)	B	43.7/84.7
C323	4030021200	S.CER GRM31A5C2J120JW01D	B	40.3/83.1
C324	4030017460	S.CER C1005 JB 1H 102K-T	B	89.0/69.0
C325	4030017460	S.CER C1005 JB 1H 102K-T	B	43.9/81.4
C326	4030011020	S.CER GRM31M4C2H1R0CY21L (GRM42-6)	B	80.9/107.9
C331	4030011020	S.CER GRM31M4C2H1R0CY21L (GRM42-6)	B	79.0/105.8
C332	4030021000	S.CER GRM31A5C2J100JW01D	B	74.1/105.8
C333	4030017460	S.CER C1005 JB 1H 102K-T	B	85.4/53.2
C336	4030016950	S.CER C1005 JB 1A 473K-T	B	87.8/66.0
C338	4030017460	S.CER C1005 JB 1H 102K-T	B	75.6/104.3
C340	4030017460	S.CER C1005 JB 1H 102K-T	B	41.7/78.8
C341	4030016930	S.CER C1005 JB 1A 104K-T	B	86.6/66.4
C343	4030017460	S.CER C1005 JB 1H 102K-T	B	87.6/108.9
C346	4030017460	S.CER C1005 JB 1H 102K-T	B	85.7/66.4
C348	4030019620	S.CER GRM188B31C225KE14D	B	88.9/52.9
C350	4030011060	S.CER GRM31M2C2H4R0CY21L (GRM42-6)	B	39.1/99.3
C352	4030017460	S.CER C1005 JB 1H 102K-T	B	86.4/118.5
C354	4030017460	S.CER C1005 JB 1H 102K-T	B	83.9/68.0
C356	4030017460	S.CER C1005 JB 1H 102K-T	B	89.9/53.2
C358	4030011020	S.CER GRM31M4C2H1R0CY21L (GRM42-6)	B	37.8/103.1
C359	4030021200	S.CER GRM31A5C2J120JW01D	B	34.4/104.6
C360	4030021230	S.CER GRM31B5C2J102JW01L	B	82.4/111.6
C363	4030021200	S.CER GRM31A5C2J120JW01D	B	80.9/115.0
C364	4030017460	S.CER C1005 JB 1H 102K-T	B	74.5/100.6
C365	4030017460	S.CER C1005 JB 1H 102K-T	B	32.9/103.2
C367	4030017460	S.CER C1005 JB 1H 102K-T	B	85.3/63.0
C369	4030017460	S.CER C1005 JB 1H 102K-T	B	47.2/90.4
C370	4030021230	S.CER GRM31B5C2J102JW01L	B	42.7/103.1
C371	4030021210	S.CER GRM31A5C2J150JW01D	B	74.5/118.0
C372	4030021230	S.CER GRM31B5C2J102JW01L	B	74.5/120.3
C373	4030017460	S.CER C1005 JB 1H 102K-T	B	81.8/61.7
C376	4030017460	S.CER C1005 JB 1H 102K-T	B	47.8/99.0
C377	4030017460	S.CER C1005 JB 1H 102K-T	T	89.7/10.1
C378	4030021210	S.CER GRM31A5C2J150JW01D	B	69.9/118.7
C379	4030017460	S.CER C1005 JB 1H 102K-T	B	29.6/102.2
C381	4030007070	S.CER C1608 CH 1H 330J-T	B	70.5/110.2
C382	4030017460	S.CER C1005 JB 1H 102K-T	B	81.8/60.7
C383	4030017460	S.CER C1005 JB 1H 102K-T	B	45.7/72.5
C384	4030016950	S.CER C1005 JB 1A 473K-T	B	88.4/57.1
C385	4030017460	S.CER C1005 JB 1H 102K-T	B	86.8/57.1
C386	4030020760	S.CER GRM31A5C2J270JW01D	B	62.0/113.6
C387	4030011070	S.CER GRM31M2C2H5R0CY21L (GRM42-6)	B	42.2/106.7
C389	4030016930	S.CER C1005 JB 1A 104K-T	B	90.3/58.5
C390	4030017650	S.CER C1005 CH 1H 270J-T	T	46.3/91.5
C391	4030011060	S.CER GRM31M2C2H4R0CY21L (GRM42-6)	B	44.5/110.9
C392	4030020770	S.CER GRM31A5C2J330JW01D	B	36.0/112.2
C394	4030020750	S.CER GRM31A5C2J220JW01D	B	57.6/115.1
C395	4030011060	S.CER GRM31M2C2H4R0CY21L (GRM42-6)	B	44.5/115.8
C396	4030006980	S.CER C1608 CH 1H 070D-T	B	34.5/109.6
C397	4030017460	S.CER C1005 JB 1H 102K-T	T	78.3/103.9
C398	4030017460	S.CER C1005 JB 1H 102K-T	B	90.3/62.4
C399	4030016790	S.CER C1005 JB 1E 103K-T	B	90.3/64.1
C400	4030017460	S.CER C1005 JB 1H 102K-T	B	85.6/55.9
C401	4030017640	S.CER C1005 CH 1H 150J-T	T	75.2/112.0

[MAIN UNIT]

REF NO.	PARTS NO.	DESCRIPTION	M.	H/V LOCATION
C402	4030011100	S.CER GRM31M2C2H8R0DV01L (GRM42-6)	B	44.5/120.7
C405	4030017650	S.CER C1005 CH 1H 270J-T	T	51.3/93.6
C406	4030017650	S.CER C1005 CH 1H 270J-T	T	95.6/38.1
C407	4030017460	S.CER C1005 JB 1H 102K-T	B	82.1/58.2
C408	4030017590	S.CER C1005 CH 1H 070C-T	B	79.7/48.5
C409	4030011050	S.CER GRM31M3C2H3R0CY21L (GRM42-6)	B	24.4/117.7
C411	4030017460	S.CER C1005 JB 1H 102K-T	T	91.2/11.2
C413	4030017350	S.CER C1005 CH 1H 020B-T	T	35.1/113.8
C414	4030017460	S.CER C1005 JB 1H 102K-T	B	82.1/57.2
C416	4030017460	S.CER C1005 JB 1H 102K-T	T	33.5/109.2
C418	4030020480	S.CER GQM2195C2E6R2BB12D	B	18.8/110.9
C419	4030017460	S.CER C1005 JB 1H 102K-T	T	74.6/110.3
C421	4030017460	S.CER C1005 JB 1H 102K-T	T	57.9/103.8
C424	4030017460	S.CER C1005 JB 1H 102K-T	T	100.9/110.8
C425	4030017460	S.CER C1005 JB 1H 102K-T	T	100.3/109.2
C428	4030011050	S.CER GRM31M3C2H3R0CY21L (GRM42-6)	B	24.4/115.6
C429	4030020770	S.CER GRM31A5C2J330JW01D	B	36.0/114.3
C430	4030011070	S.CER GRM31M2C2H5R0CY21L (GRM42-6)	B	46.6/110.9
C431	4030017460	S.CER C1005 JB 1H 102K-T	B	44.8/52.0
C500	4030017460	S.CER C1005 JB 1H 102K-T	T	117.2/21.7
C501	4030017460	S.CER C1005 JB 1H 102K-T	T	119.3/21.7
C503	4030017460	S.CER C1005 JB 1H 102K-T	T	24.7/4.8
C504	4030016930	S.CER C1005 JB 1A 104K-T	T	115.2/10.7
C505	4030020000	S.CER C1005 JB 1A 105K-T	T	26.3/4.8
C506	4030017460	S.CER C1005 JB 1H 102K-T	T	18.7/14.4
C508	4030017460	S.CER C1005 JB 1H 102K-T	T	17.8/14.4
C509	4030017460	S.CER C1005 JB 1H 102K-T	T	13.0/14.4
C510	4030019560	S.CER GRM21BB31C106KE15L	T	28.2/13.9
C511	4030017460	S.CER C1005 JB 1H 102K-T	T	14.8/14.4
C513	4030016930	S.CER C1005 JB 1A 104K-T	T	111.0/20.6
C514	4030017460	S.CER C1005 JB 1H 102K-T	T	114.2/12.3
C516	4030017460	S.CER C1005 JB 1H 102K-T	T	122.4/57.0
C517	4030018900	S.CER C1005 JB 0J 474K-T	T	107.3/20.0
C519	4030019560	S.CER GRM21BB31C106KE15L	T	109.2/8.3
C520	4030016790	S.CER C1005 JB 1E 103K-T	T	107.5/7.8
C521	4030017040	S.CER C1005 JB 1A 333K-T	T	107.5/6.0
C522	4030019560	S.CER GRM21BB31C106KE15L	T	96.3/27.8
C523	4030016930	S.CER C1005 JB 1A 104K-T	T	105.9/16.2
C524	4030019560	S.CER GRM21BB31C106KE15L	T	98.5/27.8
C525	4030020000	S.CER C1005 JB 1A 105K-T	T	28.0/4.0
C526	4030016960	S.CER C1005 JB 1E 183K-T	T	113.1/14.7
C527	4030019560	S.CER GRM21BB31C106KE15L	T	100.6/28.4
C528	4030018140	S.CER C1005 JB 1H 391K-T	T	99.7/12.9
C529	4030017420	S.CER C1005 CH 1H 470J-T	T	99.2/15.8
C530	4030017460	S.CER C1005 JB 1H 102K-T	T	31.3/1.9
C531	4030018860	S.CER C1005 JB 0J 105K-T	T	104.2/18.1
C533	4030016930	S.CER C1005 JB 1A 104K-T	T	101.1/20.0
C534	4030017460	S.CER C1005 JB 1H 102K-T	T	34.5/4.1
C535	4030019560	S.CER GRM21BB31C106KE15L	T	84.0/8.2
C536	4030018860	S.CER C1005 JB 0J 105K-T	T	117.8/16.4
C537	4030018860	S.CER C1005 JB 0J 105K-T	T	118.7/16.4
C538	4030016930	S.CER C1005 JB 1A 104K-T	T	33.5/4.1
C540	4030017920	S.CER C1005 JB 1A 683K-T	T	111.4/6.4
C541	4030020000	S.CER C1005 JB 1A 105K-T	T	29.9/2.8
C542	4030018900	S.CER C1005 JB 0J 474K-T	T	111.6/22.5
C550	4030016930	S.CER C1005 JB 1A 104K-T	T	133.3/105.8
C553	4030016930	S.CER C1005 JB 1A 104K-T	T	107.2/114.2
C554	4510008140	S.ELE 10 CE 470 BS	B	106.3/114.1
C555	4510008130	S.ELE 16 CE 220 BS	T	109.8/85.9
C556	4030016930	S.CER C1005 JB 1A 104K-T	T	133.3/106.7
C557	4510008140	S.ELE 10 CE 470 BS	B	131.6/104.7
C558	4510008130	S.ELE 16 CE 220 BS	T	109.8/93.5
C559	4030020000	S.CER C1005 JB 1A 105K-T	T	122.4/12.0
C560	4030016930	S.CER C1005 JB 1A 104K-T	B	98.9/19.3
C562	4030017460	S.CER C1005 JB 1H 102K-T	T	123.7/14.0
C564	4030018890	S.CER C1005 JB 0J 224K-T	T	129.0/77.9
C566	4030020000	S.CER C1005 JB 1A 105K-T	T	112.7/72.2
C570	4030016930	S.CER C1005 JB 1A 104K-T	T	113.4/69.8
C572	4030018890	S.CER C1005 JB 0J 224K-T	B	132.5/88.9
C576	4030018900	S.CER C1005 JB 0J 474K-T	T	128.7/73.1
C578	4030018920	S.CER C1005 JB 1H 392K-T	T	127.3/76.4
C579	4030018920	S.CER C1005 JB 1H 392K-T	B	132.5/91.3
C582	4030018900	S.CER C1005 JB 0J 474K-T	T	125.9/74.9
C583	4030017460	S.CER C1005 JB 1H 102K-T	T	127.3/70.9
C585	4030018900	S.CER C1005 JB 0J 474K-T	B	132.1/95.4
C588	4030016930	S.CER C1005 JB 1A 104K-T	T	124.2/77.9
C590	4030016930	S.CER C1005 JB 1A 104K-T	T	120.3/79.1
C591	4030017430	S.CER C1005 CH 1H 101J-T	T	113.9/73.6
C593	4030016930	S.CER C1005 JB 1A 104K-T	T	117.2/70.6
C598	4030016930	S.CER C1005 JB 1A 104K-T	T	116.6/75.4
C600	4030016930	S.CER C1005 JB 1A 104K-T	T	121.0/71.7
C602	4030019560	S.CER GRM21BB31C106KE15L	T	109.3/69.4
C603	4030016930	S.CER C1005 JB 1A 104K-T	T	115.0/75.4
C604	4030016930	S.CER C1005 JB 1A 104K-T	T	115.0/74.5
C605	4030016930	S.CER C1005 JB 1A 104K-T	B	106.8/61.7
C606	4030016930	S.CER C1005 JB 1A 104K-T	T	124.2/77.0
C607	4030019560	S.CER GRM21BB31C106KE15L	T	109.3/71.1
C609	4030016970	S.CER C1005 JB 1E 223K-T	T	103.4/66.3
C610	4030017770	S.CER C1005 JB 1H 332K-T	B	99.0/28.1
C613	4030017460	S.CER C1005 JB 1H 102K-T	T	101.1/49.5
C614	4030016930	S.CER C1005 JB 1A 104K-T	T	103.0/68.4
C615	4030017770	S.CER C1005 JB 1H 332K-T	B	99.9/26.4
C616	4030016790	S.CER C1005 JB 1E 103K-T	T	101.1/50.4
C618	4030017460	S.CER C1005 JB 1H 102K-T	T	100.9/54.4
C619	4030017460	S.CER C1005 JB 1H 102K-T	T	108.2/54.4
C622	4030017460	S.CER C1005 JB 1H 102K-T	T	96.1/46.8
C623	4030017460	S.CER C1005 JB 1H 102K-T	T	95.7/44.7
C627	4030017460	S.CER C1005 JB 1H 102K-T	T	108.2/56.5
C628	4030017460	S.CER C1005 JB 1H 102K-T	T	101.0/56.5
C634	4030020000	S.CER C1005 JB 1A 105K-T	T	103.1/61.5
C635	4030020000	S.CER C1005 JB 1A 105K-T	T	96.0/61.5

Eqv.= This component is equivalent to the REF No. component listed above, and may be substituted on parts orders and repairs.

M.=Mounted side (T: Mounted on the Top side, B: Mounted on the Bottom side)
S.=Surface mount

[MAIN UNIT]

REF NO.	PARTS NO.	DESCRIPTION	M.	H/V LOCATION
C637	4030018920	S.CER C1005 JB 1H 392K-T	T	107.7/59.5
C638	4030018920	S.CER C1005 JB 1H 392K-T	T	100.5/59.5
C643	4030018080	S.CER C1005 JB 1H 182K-T	T	107.7/57.7
C644	4030018080	S.CER C1005 JB 1H 182K-T	T	100.5/57.7
C647	4030017040	S.CER C1005 JB 1A 333K-T	T	106.1/57.7
C648	4030017040	S.CER C1005 JB 1A 333K-T	T	98.9/57.7
C658	4030016790	S.CER C1005 JB 1E 103K-T	T	103.3/57.2
C659	4030016790	S.CER C1005 JB 1E 103K-T	T	96.1/57.4
C660	4030017460	S.CER C1005 JB 1H 102K-T	T	104.5/56.8
C661	4030017460	S.CER C1005 JB 1H 102K-T	T	97.3/56.8
C664	4030016780	S.CER C1005 JB 1E 153K-T	T	104.5/54.4
C665	4030016780	S.CER C1005 JB 1E 153K-T	T	97.3/54.5
C674	4030016790	S.CER C1005 JB 1E 103K-T	T	104.5/53.5
C675	4030016790	S.CER C1005 JB 1E 103K-T	T	97.3/53.6
C679	4030017460	S.CER C1005 JB 1H 102K-T	T	21.5/18.3
C680	4030017460	S.CER C1005 JB 1H 102K-T	T	62.2/16.8
C683	4030017460	S.CER C1005 JB 1H 102K-T	T	18.2/18.4
C684	4030017460	S.CER C1005 JB 1H 102K-T	T	59.8/19.2
C686	4030017760	S.CER C1005 JB 1H 222K-T	T	109.2/31.3
C688	4030017760	S.CER C1005 JB 1H 222K-T	T	109.2/37.8
C691	4030016790	S.CER C1005 JB 1E 103K-T	T	11.9/21.8
C692	4030016970	S.CER C1005 JB 1E 223K-T	T	106.6/31.2
C693	4030016790	S.CER C1005 JB 1E 103K-T	T	52.9/21.9
C694	4030016970	S.CER C1005 JB 1E 223K-T	T	106.6/37.8
C695	4030016930	S.CER C1005 JB 1A 104K-T	T	17.3/23.2
C696	4030016930	S.CER C1005 JB 1A 104K-T	T	11.3/24.1
C697	4030016930	S.CER C1005 JB 1A 104K-T	T	58.2/23.2
C698	4030016930	S.CER C1005 JB 1A 104K-T	T	52.3/24.1
C699	4030018080	S.CER C1005 JB 1H 182K-T	T	103.8/32.3
C700	4030018080	S.CER C1005 JB 1H 182K-T	T	103.8/38.8
C701	4030016790	S.CER C1005 JB 1E 103K-T	T	107.9/35.7
C702	4030016790	S.CER C1005 JB 1E 103K-T	T	107.9/42.2
C703	4030017040	S.CER C1005 JB 1A 333K-T	T	103.3/34.4
C704	4030017040	S.CER C1005 JB 1A 333K-T	T	103.3/40.9
C705	4030016930	S.CER C1005 JB 1A 104K-T	T	13.0/17.7
C706	4030016930	S.CER C1005 JB 1A 104K-T	T	13.0/19.6
C707	4030016930	S.CER C1005 JB 1A 104K-T	T	53.9/17.7
C708	4030016930	S.CER C1005 JB 1A 104K-T	T	53.9/19.6
C709	4030017460	S.CER C1005 JB 1H 102K-T	T	102.2/35.6
C710	4030017460	S.CER C1005 JB 1H 102K-T	T	102.2/42.1
C713	4030016930	S.CER C1005 JB 1A 104K-T	B	101.3/36.5
C714	4030016790	S.CER C1005 JB 1E 103K-T	T	15.7/17.7
C715	4030016790	S.CER C1005 JB 1E 103K-T	T	56.7/17.7
C716	4030017790	S.CER C1005 JB 1H 682K-T	T	100.6/32.3
C717	4030016790	S.CER C1005 JB 1E 103K-T	T	100.6/35.6
C718	4030017790	S.CER C1005 JB 1H 682K-T	T	101.3/38.8
C719	4030016790	S.CER C1005 JB 1E 103K-T	T	100.6/42.1
C720	4030016930	S.CER C1005 JB 1A 104K-T	T	12.9/25.1
C721	4030016930	S.CER C1005 JB 1A 104K-T	T	53.4/25.1
C722	4030016930	S.CER C1005 JB 1A 104K-T	T	8.8/28.0
C723	4030016930	S.CER C1005 JB 1A 104K-T	T	13.8/25.1
C724	4030016930	S.CER C1005 JB 1A 104K-T	T	49.8/28.0
C725	4030016930	S.CER C1005 JB 1A 104K-T	T	54.7/25.1
C726	4030016930	S.CER C1005 JB 1A 104K-T	T	17.2/27.9
C727	4030016930	S.CER C1005 JB 1A 104K-T	T	58.7/28.6
C728	4030016930	S.CER C1005 JB 1A 104K-T	T	17.2/27.0
C729	4030016930	S.CER C1005 JB 1A 104K-T	T	57.8/28.6
C730	4030017420	S.CER C1005 CH 1H 470J-T	T	15.4/25.6
C732	4030016930	S.CER C1005 JB 1A 104K-T	T	17.0/24.6
C733	4030017420	S.CER C1005 CH 1H 470J-T	T	56.4/25.6
C735	4030016930	S.CER C1005 JB 1A 104K-T	T	58.0/24.6
C740	4030017460	S.CER C1005 JB 1H 102K-T	B	98.0/31.1
C741	4030017460	S.CER C1005 JB 1H 102K-T	B	99.1/38.6
C742	4030016930	S.CER C1005 JB 1A 104K-T	B	16.4/28.5
C743	4030016930	S.CER C1005 JB 1A 104K-T	B	57.1/28.5
C744	4030016790	S.CER C1005 JB 1E 103K-T	T	82.5/9.9
C745	4030016790	S.CER C1005 JB 1E 103K-T	T	84.4/16.2
C746	4030017460	S.CER C1005 JB 1H 102K-T	B	8.9/39.1
C747	4030017420	S.CER C1005 CH 1H 470J-T	B	49.9/39.1
C748	4030017460	S.CER C1005 JB 1H 102K-T	T	82.5/8.1
C749	4030017460	S.CER C1005 JB 1H 102K-T	T	84.4/17.1
C750	4030019560	S.CER GRM21BB31C106KE15L	B	10.0/28.6
C751	4030019560	S.CER GRM21BB31C106KE15L	B	50.3/28.6
C752	4030016930	S.CER C1005 JB 1A 104K-T	B	9.2/30.0
C753	4030016930	S.CER C1005 JB 1A 104K-T	B	50.1/30.0
C754	4030017460	S.CER C1005 JB 1H 102K-T	T	15.9/34.9
C755	4030017460	S.CER C1005 JB 1H 102K-T	T	56.9/34.9
C756	4030017770	S.CER C1005 JB 1H 332K-T	B	95.7/30.4
C757	4030017770	S.CER C1005 JB 1H 332K-T	B	95.4/37.8
C758	4030016790	S.CER C1005 JB 1E 103K-T	B	10.5/37.7
C759	4030016790	S.CER C1005 JB 1E 103K-T	B	51.4/37.7
C760	4030017040	S.CER C1005 JB 1A 333K-T	B	9.2/32.6
C761	4030017040	S.CER C1005 JB 1A 333K-T	B	50.1/32.6
C762	4030017690	S.CER C1005 CH 1H 121J-T	T	14.7/36.3
C763	4030017690	S.CER C1005 CH 1H 121J-T	T	55.7/36.3
C764	4550007260	S.TAN F931C475MAABMA	B	14.8/39.4
C765	4550007260	S.TAN F931C475MAABMA	B	55.7/39.4
C766	4030019560	S.CER GRM21BB31C106KE15L	T	10.5/35.7
C767	4030019560	S.CER GRM21BB31C106KE15L	T	51.6/35.7
C768	4030017620	S.CER C1005 CH 1H 100C-T	T	14.7/34.5
C769	4030017620	S.CER C1005 CH 1H 100C-T	T	55.7/34.5
C770	4030017690	S.CER C1005 CH 1H 121J-T	T	13.5/35.8
C771	4030017690	S.CER C1005 CH 1H 121J-T	T	54.5/35.8
C772	4030016930	S.CER C1005 JB 1A 104K-T	T	8.8/31.5
C773	4030016930	S.CER C1005 JB 1A 104K-T	T	49.8/31.5
C774	4030017460	S.CER C1005 JB 1H 102K-T	T	115.4/28.0
C775	4030017460	S.CER C1005 JB 1H 102K-T	T	112.4/30.4
C776	4030017460	S.CER C1005 JB 1H 102K-T	B	10.9/41.6
C777	4030017460	S.CER C1005 JB 1H 102K-T	B	51.9/41.6
C778	4030017460	S.CER C1005 JB 1H 102K-T	T	11.7/37.6
C779	4030017460	S.CER C1005 JB 1H 102K-T	T	52.7/37.8
C780	4030017460	S.CER C1005 JB 1H 102K-T	T	14.8/44.1
C781	4030017460	S.CER C1005 JB 1H 102K-T	T	55.8/44.1
C782	4030016790	S.CER C1005 JB 1E 103K-T	T	10.6/40.3
C783	4030016790	S.CER C1005 JB 1E 103K-T	T	51.6/40.3

[MAIN UNIT]

REF NO.	PARTS NO.	DESCRIPTION	M.	H/V LOCATION
C784	4030017460	S.CER C1005 JB 1H 102K-T	T	13.9/41.3
C785	4030020000	S.CER C1005 JB 1A 105K-T	T	118.8/34.5
C786	4030016790	S.CER C1005 JB 1E 103K-T	T	120.5/29.8
C787	4030017460	S.CER C1005 JB 1H 102K-T	T	54.9/41.3
C788	4030020000	S.CER C1005 JB 1A 105K-T	T	112.7/35.2
C789	4030016790	S.CER C1005 JB 1E 103K-T	T	115.9/32.6
C790	4030017660	S.CER C1005 CH 1H 330J-T	T	13.5/42.9
C791	4030016790	S.CER C1005 JB 1E 103K-T	T	8.8/40.3
C792	4030017420	S.CER C1005 CH 1H 470J-T	T	54.5/42.9
C793	4030016790	S.CER C1005 JB 1E 103K-T	T	49.8/40.3
C794	4030016790	S.CER C1005 JB 1E 103K-T	T	118.8/33.6
C795	4030016790	S.CER C1005 JB 1E 103K-T	T	113.6/35.2
C796	4030016790	S.CER C1005 JB 1E 103K-T	T	10.7/45.4
C797	4030016790	S.CER C1005 JB 1E 103K-T	T	51.8/45.4
C798	4030017460	S.CER C1005 JB 1H 102K-T	T	12.0/46.2
C799	4030017460	S.CER C1005 JB 1H 102K-T	T	53.1/46.2
C801	4030017340	S.CER C1005 CH 1H 010B-T	T	53.9/48.2
C802	4030017580	S.CER C1005 CH 1H 060C-T	T	8.8/54.9
C803	4030017630	S.CER C1005 CH 1H 120J-T	T	50.5/54.9
C805	4030017350	S.CER C1005 CH 1H 020B-T	T	53.8/58.1
C806	4030017460	S.CER C1005 JB 1H 102K-T	T	13.3/60.2
C807	4030017460	S.CER C1005 JB 1H 102K-T	T	55.0/60.3
C808	4030017460	S.CER C1005 JB 1H 102K-T	T	18.2/68.0
C809	4030016790	S.CER C1005 JB 1E 103K-T	T	8.8/34.7
C810	4030017390	S.CER C1005 CH 1H 180J-T	T	18.6/69.3
C811	4030017340	S.CER C1005 CH 1H 010B-T	T	49.6/54.9
C813	4030017460	S.CER C1005 JB 1H 102K-T	T	19.5/66.9
C816	4030020000	S.CER C1005 JB 1A 105K-T	T	106.1/35.7
C817	4030017600	S.CER C1005 CH 1H 080C-T	T	21.6/64.7
C818	4030017630	S.CER C1005 CH 1H 120J-T	T	117.4/31.0
C820	4030017460	S.CER C1005 JB 1H 102K-T	T	63.2/66.8
C821	4030016790	S.CER C1005 JB 1E 103K-T	T	50.0/35.4
C822	4030017400	S.CER C1005 CH 1H 220J-T	T	61.7/65.8
C823	4030017460	S.CER C1005 JB 1H 102K-T	T	63.1/69.6
C824	4030017600	S.CER C1005 CH 1H 080C-T	T	64.4/70.1
C828	4030020000	S.CER C1005 JB 1A 105K-T	T	106.1/42.2
C830	4030017460	S.CER C1005 JB 1H 102K-T	T	102.1/53.5
C831	4030017760	S.CER C1005 JB 1H 222K-T	T	102.1/54.4
C832	4030017460	S.CER C1005 JB 1H 102K-T	T	97.3/52.7
C833	4030017760	S.CER C1005 JB 1H 222K-T	T	97.3/55.4
C855	4030018140	S.CER C1005 JB 1H 391K-T	T	103.8/9.1
C856	4030018920	S.CER C1005 JB 1H 392K-T	T	106.3/9.1
C857	4030017430	S.CER C1005 CH 1H 101J-T	T	110.7/11.1
C860	4030017920	S.CER C1005 JB 1A 683K-T	T	111.6/9.4
C861	4030018240	S.CER C1005 JB 1H 562K-T	T	110.5/14.7
C862	4030016950	S.CER C1005 JB 1A 473K-T	T	111.8/14.3
C866	4030017040	S.CER C1005 JB 1A 333K-T	T	100.9/10.0
C867	4030017390	S.CER C1005 CH 1H 180J-T	T	13.9/68.4
C868	4030017460	S.CER C1005 JB 1H 102K-T	T	12.0/71.7
C869	4030017460	S.CER C1005 JB 1H 102K-T	T	16.0/73.4
C871	4030017460	S.CER C1005 JB 1H 102K-T	T	11.4/69.9
C872	4030017460	S.CER C1005 JB 1H 102K-T	T	58.3/67.0
C873	4030017400	S.CER C1005 CH 1H 220J-T	T	56.3/64.9
C874	4030017460	S.CER C1005 JB 1H 102K-T	T	58.0/69.6
C875	4030017460	S.CER C1005 JB 1H 102K-T	T	57.8/71.7
C876	4030018860	S.CER C1005 JB 0J 105K-T	T	111.8/15.2
C877	4030018860	S.CER C1005 JB 0J 105K-T	T	108.2/18.4
C878	4030017460	S.CER C1005 JB 1H 102K-T	T	21.2/66.0
C879	4030017460	S.CER C1005 JB 1H 102K-T	T	63.2/71.7
C880	4030016930	S.CER C1005 JB 1A 104K-T	B	105.0/58.5
C882	4030019560	S.CER GRM21BB31C106KE15L	T	100.2/62.6
C883	4030019560	S.CER GRM21BB31C106KE15L	B	102.9/55.2
C884	4030017340	S.CER C1005 CH 1H 010B-T	T	17.2/75.4
C885	4030017350	S.CER C1005 CH 1H 020B-T	T	70.2/76.5
C886	4030017350	S.CER C1005 CH 1H 020B-T	T	57.7/74.6
C887	4030017350	S.CER C1005 CH 1H 020B-T	T	64.4/66.4
C888	4030017340	S.CER C1005 CH 1H 010B-T	T	56.1/72.9
C889	4030017530	S.CER C1005 CH 1H 0R5B-T	T	58.2/72.9
C890	4030017460	S.CER C1005 JB 1H 102K-T	T	9.4/80.0
C891	4030017460	S.CER C1005 JB 1H 102K-T	T	15.6/82.2
C892	4030017460	S.CER C1005 JB 1H 102K-T	T	12.7/66.3
C893	4030017460	S.CER C1005 JB 1H 102K-T	T	36.1/59.8
C894	4030017460	S.CER C1005 JB 1H 102K-T	T	40.5/58.9
C895	4030017460	S.CER C1005 JB 1H 102K-T	T	41.5/58.9
C896	4030017460	S.CER C1005 JB 1H 102K-T	T	45.8/60.7
C897	4030017460	S.CER C1005 JB 1H 102K-T	T	45.5/54.4
C898	4030017460	S.CER C1005 JB 1H 102K-T	T	48.0/55.7
C899	4030017460	S.CER C1005 JB 1H 102K-T	T	46.0/72.5
C902	4030017460	S.CER C1005 JB 1H 102K-T	B	81.5/11.2
C905	4030017360	S.CER C1005 CH 1H 030B-T	B	67.8/27.5
C906	4030017640	S.CER C1005 CH 1H 150J-T	B	69.7/30.1
C907	4030017460	S.CER C1005 JB 1H 102K-T	B	77.3/11.2
C908	4030017570	S.CER C1005 CH 1H 040B-T	B	69.4/28.9
C909	4030017460	S.CER C1005 JB 1H 102K-T	B	79.1/13.4
C910	4030016790	S.CER C1005 JB 1E 103K-T	B	69.1/26.8
C911	4030017680	S.CER C1005 CH 1H 820J-T	B	68.6/25.8
C912	4030016930	S.CER C1005 JB 1A 104K-T	B	77.6/14.0
C913	4030017620	S.CER C1005 CH 1H 100C-T	B	68.5/22.1
C914	4030017620	S.CER C1005 CH 1H 100C-T	B	72.4/14.6
C915	4030017460	S.CER C1005 JB 1H 102K-T	B	72.4/15.6
C917	4030017460	S.CER C1005 JB 1H 102K-T	B	89.4/21.5
C918	4030017460	S.CER C1005 JB 1H 102K-T	B	89.4/22.8
C919	4030016930	S.CER C1005 JB 1A 104K-T	B	74.2/17.8
C920	4030016930	S.CER C1005 JB 1A 104K-T	B	75.9/23.0
C921	4030017730	S.CER C1005 JB 1H 471K-T	B	74.8/25.1
C922	4030017460	S.CER C1005 JB 1H 102K-T	B	89.4/24.5
C923	4030011810	S.CER C1608 JB 1A 224K-T	B	75.8/25.6
C924	4550007550	S.TAN F931V334MAABMA	B	79.7/19.1
C925	4030017460	S.CER C1005 JB 1H 102K-T	B	82.6/24.2
C926	4030016930	S.CER C1005 JB 1A 104K-T	B	82.6/22.6
C927	4030017460	S.CER C1005 JB 1H 102K-T	B	83.8/20.8
C928	4550007390	S.TAN F931C225MAABMA	B	85.4/19.1
C930	4550007550	S.TAN F931V334MAABMA	T	88.8/22.9
C932	4030017460	S.CER C1005 JB 1H 102K-T	T	89.6/24.5
C935	4030017460	S.CER C1005 JB 1H 102K-T	B	83.2/30.5

Eqv.= This component is equivalent to the REF No. component listed above, and may be substituted on parts orders and repairs.

M.=Mounted side (T: Mounted on the Top side, B: Mounted on the Bottom side)
S.=Surface mount

[MAIN UNIT]

REF NO.	PARTS NO.	DESCRIPTION	M.	H/V LOCATION
C936	4030019560	S.CER GRM21BB31C106KE15L	B	86.3/39.7
C937	4030017460	S.CER C1005 JB 1H 102K-T	T	76.7/24.2
C938	4030017460	S.CER C1005 JB 1H 102K-T	T	90.1/32.4
C939	4030017420	S.CER C1005 CH 1H 470J-T	B	86.4/37.6
C940	4030017460	S.CER C1005 JB 1H 102K-T	T	83.4/31.1
C941	4030017460	S.CER C1005 JB 1H 102K-T	T	86.5/30.0
C942	4030017460	S.CER C1005 JB 1H 102K-T	T	82.5/31.1
C943	4030017460	S.CER C1005 JB 1H 102K-T	T	88.3/36.3
C944	4030009350	S.CER C1608 CH 1H 3R5B-T	T	85.4/30.5
C945	4030017460	S.CER C1005 JB 1H 102K-T	B	89.3/33.4
C946	4030017460	S.CER C1005 JB 1H 102K-T	B	89.3/32.5
C947	4030007040	S.CER C1608 CH 1H 180J-T	T	80.4/26.3
C949	4030007010	S.CER C1608 CH 1H 100D-T	T	86.2/33.5
C950	4030007030	S.CER C1608 CH 1H 150J-T	T	88.8/33.5
C951	4030017460	S.CER C1005 JB 1H 102K-T	T	90.5/35.4
C952	4030007040	S.CER C1608 CH 1H 180J-T	T	80.4/28.9
C953	4030007040	S.CER C1608 CH 1H 180J-T	T	79.4/31.7
C954	4030017460	S.CER C1005 JB 1H 102K-T	T	77.8/27.6
C957	4030017340	S.CER C1005 CH 1H 010B-T	T	88.3/37.6
C958	4030017460	S.CER C1005 JB 1H 102K-T	T	90.4/37.2
C959	4030017460	S.CER C1005 JB 1H 102K-T	T	75.1/27.1
C960	4030017460	S.CER C1005 JB 1H 102K-T	T	78.4/31.2
C961	4030017530	S.CER C1005 CH 1H 0R5B-T	T	77.5/32.5
C963	4030017460	S.CER C1005 JB 1H 102K-T	T	73.9/28.5
C964	4030017460	S.CER C1005 JB 1H 102K-T	T	78.9/36.8
C965	4030017460	S.CER C1005 JB 1H 102K-T	T	74.6/33.8
C967	4030017360	S.CER C1005 CH 1H 030B-T	T	73.4/33.5
C968	4030017460	S.CER C1005 JB 1H 102K-T	T	84.6/39.5
C970	4030017620	S.CER C1005 CH 1H 100C-T	T	83.3/39.9
C971	4030016790	S.CER C1005 JB 1E 103K-T	T	73.2/30.7
C972	4030017400	S.CER C1005 CH 1H 220J-T	T	76.4/36.4
C973	4030016930	S.CER C1005 JB 1A 104K-T	B	68.9/18.8
C974	4030017460	S.CER C1005 JB 1H 102K-T	T	58.6/26.2
C976	4030017460	S.CER C1005 JB 1H 102K-T	T	65.6/47.3
C977	4030017430	S.CER C1005 CH 1H 101J-T	B	72.3/24.6
C978	4030016930	S.CER C1005 JB 1A 104K-T	B	28.1/16.2
C979	4030016930	S.CER C1005 JB 1A 104K-T	B	48.1/20.8
C980	4030018890	S.CER C1005 JB 0J 224K-T	B	30.8/24.6
C983	4030017460	S.CER C1005 JB 1H 102K-T	T	75.4/10.3
C984	4030017460	S.CER C1005 JB 1H 102K-T	T	63.5/54.5
C988	4030017380	S.CER C1005 CH 1H 050B-T	T	62.8/56.3
C989	4030018890	S.CER C1005 JB 0J 224K-T	B	71.4/24.6
C991	4030017460	S.CER C1005 JB 1H 102K-T	T	64.0/52.1
C992	4030017400	S.CER C1005 CH 1H 220J-T	T	68.6/56.6
C993	4030017430	S.CER C1005 CH 1H 101J-T	B	31.7/24.6
C994	4030017460	S.CER C1005 JB 1H 102K-T	B	68.9/16.6
C995	4030017600	S.CER C1005 CH 1H 080C-T	T	62.8/57.2
C996	4030016930	S.CER C1005 JB 1A 104K-T	T	77.9/9.5
C997	4030017400	S.CER C1005 CH 1H 220J-T	T	68.3/57.8
C999	4030017460	S.CER C1005 JB 1H 102K-T	T	69.9/56.9
C1000	4030017460	S.CER C1005 JB 1H 102K-T	T	77.9/10.4
C1002	4030020000	S.CER C1005 JB 1A 105K-T	T	72.6/12.8
C1006	4030020000	S.CER C1005 JB 1A 105K-T	T	72.6/11.9
C1007	4030017460	S.CER C1005 JB 1H 102K-T	T	64.9/55.5
C1009	4030017460	S.CER C1005 JB 1H 102K-T	T	70.1/10.2
C1012	4030017460	S.CER C1005 JB 1H 102K-T	T	72.7/15.4
C1014	4030017460	S.CER C1005 JB 1H 102K-T	B	41.1/13.3
C1018	4030017630	S.CER C1005 CH 1H 120J-T	B	39.3/13.3
C1019	4030017360	S.CER C1005 CH 1H 030B-T	B	26.6/27.7
C1020	4030017600	S.CER C1005 CH 1H 080C-T	B	29.1/29.1
C1021	4030017460	S.CER C1005 JB 1H 102K-T	B	29.7/15.0
C1022	4030017570	S.CER C1005 CH 1H 040B-T	B	27.3/29.1
C1023	4030016790	S.CER C1005 JB 1E 103K-T	B	27.7/26.6
C1024	4030017500	S.CER C1005 CH 1H 560J-T	B	27.7/25.6
C1025	4030016930	S.CER C1005 JB 1A 104K-T	B	41.2/16.7
C1026	4030017620	S.CER C1005 CH 1H 100C-T	B	27.7/22.0
C1027	4030017460	S.CER C1005 JB 1H 102K-T	B	40.3/16.7
C1028	4030017620	S.CER C1005 CH 1H 100C-T	B	34.5/15.0
C1029	4030017460	S.CER C1005 JB 1H 102K-T	B	34.1/16.2
C1033	4030017460	S.CER C1005 JB 1H 102K-T	B	47.2/23.7
C1034	4030017460	S.CER C1005 JB 1H 102K-T	B	47.2/25.0
C1035	4030016930	S.CER C1005 JB 1A 104K-T	B	34.0/18.3
C1036	4030016930	S.CER C1005 JB 1A 104K-T	B	35.7/24.7
C1037	4030017730	S.CER C1005 JB 1H 471K-T	B	33.6/24.7
C1038	4030017460	S.CER C1005 JB 1H 102K-T	B	45.6/27.4
C1039	4030011810	S.CER C1608 JB 1A 224K-T	B	34.7/25.2
C1041	4550007550	S.TAN F931V334MAABMA	B	39.7/21.2
C1042	4030017460	S.CER C1005 JB 1H 102K-T	B	42.4/25.6
C1043	4030016930	S.CER C1005 JB 1A 104K-T	B	42.2/21.8
C1044	4030017460	S.CER C1005 JB 1H 102K-T	B	41.3/21.8
C1045	4550007390	S.TAN F931C225MAABMA	B	43.5/19.5
C1047	4030016930	S.CER C1005 JB 1A 104K-T	B	41.5/29.3
C1048	4550007550	S.TAN F931V334MAABMA	T	44.4/24.7
C1050	4030017460	S.CER C1005 JB 1H 102K-T	T	44.3/27.0
C1051	4030017460	S.CER C1005 JB 1H 102K-T	B	44.3/34.9
C1052	4030019560	S.CER GRM21BB31C106KE15L	B	42.6/35.8
C1053	4030017460	S.CER C1005 JB 1H 102K-T	T	39.7/28.0
C1054	4030017460	S.CER C1005 JB 1H 102K-T	T	77.6/23.3
C1056	4030017460	S.CER C1005 JB 1H 102K-T	T	35.8/34.4
C1058	4030017460	S.CER C1005 JB 1H 102K-T	B	42.5/33.7
C1059	4030017520	S.CER C1005 CH 1H 0R3B-T	T	39.9/30.4
C1060	4030017520	S.CER C1005 CH 1H 0R3B-T	T	81.3/24.4
C1061	4030017460	S.CER C1005 JB 1H 102K-T	B	47.3/34.8
C1062	4030017460	S.CER C1005 JB 1H 102K-T	B	46.3/29.7
C1064	4030017460	S.CER C1005 JB 1H 102K-T	T	37.7/31.1
C1065	4030017460	S.CER C1005 JB 1H 102K-T	T	42.2/33.3
C1066	4030017460	S.CER C1005 JB 1H 102K-T	T	36.8/31.1
C1067	4030017460	S.CER C1005 JB 1H 102K-T	T	43.8/39.6
C1068	4030009350	S.CER C1608 CH 1H 3R5B-T	T	41.0/33.8
C1069	4030007040	S.CER C1608 CH 1H 180J-T	T	34.7/26.3
C1071	4030007010	S.CER C1608 CH 1H 100D-T	T	41.7/36.7
C1072	4030007030	S.CER C1608 CH 1H 150J-T	T	44.3/36.7
C1073	4030007040	S.CER C1608 CH 1H 180J-T	T	34.7/28.9
C1074	4030007040	S.CER C1608 CH 1H 180J-T	T	33.6/31.2
C1075	4030017460	S.CER C1005 JB 1H 102K-T	T	45.4/38.7

[MAIN UNIT]

REF NO.	PARTS NO.	DESCRIPTION	M.	H/V LOCATION
C1076	4030017460	S.CER C1005 JB 1H 102K-T	T	33.2/25.1
C1079	4030017340	S.CER C1005 CH 1H 010B-T	T	39.3/37.7
C1080	4030017460	S.CER C1005 JB 1H 102K-T	T	37.6/39.9
C1081	4030017460	S.CER C1005 JB 1H 102K-T	T	29.3/28.7
C1082	4030017460	S.CER C1005 JB 1H 102K-T	T	32.6/30.7
C1083	4030017530	S.CER C1005 CH 1H 0R5B-T	T	31.9/32.1
C1085	4030017460	S.CER C1005 JB 1H 102K-T	T	29.3/27.8
C1086	4030017460	S.CER C1005 JB 1H 102K-T	T	34.3/34.4
C1087	4030017460	S.CER C1005 JB 1H 102K-T	T	30.8/33.6
C1089	4030017360	S.CER C1005 CH 1H 030B-T	T	29.0/35.0
C1090	4030017460	S.CER C1005 JB 1H 102K-T	T	34.0/36.3
C1092	4030016790	S.CER C1005 JB 1E 103K-T	T	29.3/29.6
C1093	4030017400	S.CER C1005 CH 1H 220J-T	T	31.9/37.9
C1094	4030017620	S.CER C1005 CH 1H 100C-T	T	36.0/39.7
C1095	4030017460	S.CER C1005 JB 1H 102K-T	T	28.9/36.2
C1097	4030017460	S.CER C1005 JB 1H 102K-T	T	24.8/47.3
C1098	4030017460	S.CER C1005 JB 1H 102K-T	T	21.0/50.3
C1099	4030017460	S.CER C1005 JB 1H 102K-T	T	24.2/54.9
C1101	4030017460	S.CER C1005 JB 1H 102K-T	T	23.2/52.1
C1102	4030017380	S.CER C1005 CH 1H 050B-T	T	20.2/56.8
C1104	4030017600	S.CER C1005 CH 1H 080C-T	T	20.2/57.7
C1105	4030017400	S.CER C1005 CH 1H 220J-T	T	27.8/56.6
C1106	4030017400	S.CER C1005 CH 1H 220J-T	T	27.8/58.3
C1107	4030017460	S.CER C1005 JB 1H 102K-T	T	24.2/55.8
C1108	4030017460	S.CER C1005 JB 1H 102K-T	T	30.2/54.8
C1109	4030016930	S.CER C1005 JB 1A 104K-T	T	79.3/18.0
C1121	4030017460	S.CER C1005 JB 1H 102K-T	T	26.5/48.5
C1122	4030017460	S.CER C1005 JB 1H 102K-T	T	21.9/48.2
C1123	4030017460	S.CER C1005 JB 1H 102K-T	T	62.7/48.2
C1124	4030017460	S.CER C1005 JB 1H 102K-T	T	67.2/48.5
C1125	4030017460	S.CER C1005 JB 1H 102K-T	T	61.8/50.3
C1127	4030017460	S.CER C1005 JB 1H 102K-T	T	26.6/54.6
C1130	4030017600	S.CER C1005 CH 1H 080C-T	T	60.6/55.2
C1132	4030017460	S.CER C1005 JB 1H 102K-T	T	67.4/54.6
C1133	4030017460	S.CER C1005 JB 1H 102K-T	B	32.6/24.6
C1134	4030017460	S.CER C1005 JB 1H 102K-T	B	73.3/25.7
C1137	4030017460	S.CER C1005 JB 1H 102K-T	B	32.3/17.0
C1138	4030017460	S.CER C1005 JB 1H 102K-T	B	70.7/16.9
C1139	4030017360	S.CER C1005 CH 1H 030B-T	T	24.1/50.2
C1140	4030017360	S.CER C1005 CH 1H 030B-T	T	64.5/50.1
C1141	4030017360	S.CER C1005 CH 1H 030B-T	T	29.8/39.5
C1142	4030017360	S.CER C1005 CH 1H 030B-T	T	34.7/39.5
C1143	4030017360	S.CER C1005 CH 1H 030B-T	T	82.4/37.4
C1144	4030017360	S.CER C1005 CH 1H 030B-T	T	73.8/37.2
C1200	4030017420	S.CER C1005 CH 1H 470J-T	T	132.5/14.1
C1201	4030017460	S.CER C1005 JB 1H 102K-T	T	129.1/14.0
C1202	4030017420	S.CER C1005 CH 1H 470J-T	T	111.5/48.8
C1203	4030017780	S.CER C1005 JB 1H 472K-T	B	127.7/60.5
C1204	4030017780	S.CER C1005 JB 1H 472K-T	B	128.1/61.4
C1205	4030017780	S.CER C1005 JB 1H 472K-T	B	129.7/61.4
C1207	4030017780	S.CER C1005 JB 1H 472K-T	B	130.2/60.4
C1208	4030017780	S.CER C1005 JB 1H 472K-T	B	121.7/61.4
C1209	4030017780	S.CER C1005 JB 1H 472K-T	B	122.1/60.4
C1210	4030017780	S.CER C1005 JB 1H 472K-T	B	123.7/60.4
C1211	4030017780	S.CER C1005 JB 1H 472K-T	B	124.2/61.4
C1212	4030017780	S.CER C1005 JB 1H 472K-T	B	126.0/60.5
C1213	4030017780	S.CER C1005 JB 1H 472K-T	B	126.0/61.4
C1214	4030017780	S.CER C1005 JB 1H 472K-T	B	120.5/60.4
C1215	4030017780	S.CER C1005 JB 1H 472K-T	B	118.8/61.4
C1216	4030016930	S.CER C1005 JB 1A 104K-T	B	130.5/54.0
C1221	4030016790	S.CER C1005 JB 1E 103K-T	T	135.7/46.9
C1223	4030019560	S.CER GRM21BB31C106KE15L	T	133.0/49.2
C1225	4030016930	S.CER C1005 JB 1A 104K-T	T	136.3/42.3
C1227	4030017630	S.CER C1005 CH 1H 120J-T	B	133.6/51.3
C1231	4030017460	S.CER C1005 JB 1H 102K-T	B	131.9/45.0
C1232	4030016790	S.CER C1005 JB 1E 103K-T	B	136.0/44.9
C1233	4030017460	S.CER C1005 JB 1H 102K-T	B	136.0/43.1
C1235	4030016930	S.CER C1005 JB 1A 104K-T	B	132.1/41.9
C1236	4030017460	S.CER C1005 JB 1H 102K-T	B	136.0/44.0
C1239	4030019560	S.CER GRM21BB31C106KE15L	T	128.5/56.8
C1241	4030019560	S.CER GRM21BB31C106KE15L	T	113.3/62.7
C1244	4030019560	S.CER GRM21BB31C106KE15L	T	117.3/50.4
C1256	4030020000	S.CER C1005 JB 1A 105K-T	T	127.9/28.3
C1257	4030020120	S.CER C1005 JB 0J 225M-T	T	124.8/23.9
C1262	4030017460	S.CER C1005 JB 1H 102K-T	T	122.3/25.4
C1263	4030016930	S.CER C1005 JB 1A 104K-T	T	121.4/25.4
C1265	4030020000	S.CER C1005 JB 1A 105K-T	B	132.8/17.8
C1268	4030020000	S.CER C1005 JB 1A 105K-T	B	134.5/20.3
C1269	4030017430	S.CER C1005 CH 1H 101J-T	T	124.7/27.4
C1274	4050000280	S.FEE CTH30V222S15A-TM	B	114.7/90.4
C1275	4510010240	S.ELE 16 CE 680 LX	B	99.5/83.2
C1276	4030017460	S.CER C1005 JB 1H 102K-T	B	112.8/74.1
C1277	4030017460	S.CER C1005 JB 1H 102K-T	B	110.3/90.8
C1279	4030017460	S.CER C1005 JB 1H 102K-T	B	112.5/72.2
C1281	4030017460	S.CER C1005 JB 1H 102K-T	T	134.9/55.7
C1282	4030016930	S.CER C1005 JB 1A 104K-T	B	114.0/70.4
C1284	4030016790	S.CER C1005 JB 1E 103K-T	T	135.8/59.0
C1285	4030017460	S.CER C1005 JB 1H 102K-T	B	116.0/71.1
C1286	4030020000	S.CER C1005 JB 1A 105K-T	T	133.7/57.7
C1291	4030018860	S.CER C1005 JB 0J 105K-T	B	113.2/69.2
C1293	4030020000	S.CER C1005 JB 1A 105K-T	B	112.7/64.8
C1294	4030019560	S.CER GRM21BB31C106KE15L	T	116.2/65.4
C1295	4030017460	S.CER C1005 JB 1H 102K-T	T	103.7/97.6
C1296	4030016930	S.CER C1005 JB 1A 104K-T	T	117.9/65.7
C1298	4030019560	S.CER GRM21BB31C106KE15L	B	111.7/94.8
C1299	4030019550	S.CER C1608 JB 1E 334K-T	B	117.6/101.1
C1300	4030020000	S.CER C1005 JB 1A 105K-T	T	97.3/73.0
C1301	4030016930	S.CER C1005 JB 1A 104K-T	T	126.4/66.7
C1302	4030020000	S.CER C1005 JB 1A 105K-T	T	98.4/68.6
C1303	4030016930	S.CER C1005 JB 1A 104K-T	B	111.2/93.4
C1305	4030016930	S.CER C1005 JB 1A 104K-T	T	98.7/65.0
C1306	4030016930	S.CER C1005 JB 1A 104K-T	T	46.1/13.6
C1307	4030016930	S.CER C1005 JB 1A 104K-T	T	53.2/13.7
C1308	4030016930	S.CER C1005 JB 1A 104K-T	T	39.8/13.7
C1309	4030017460	S.CER C1005 JB 1H 102K-T	T	47.0/13.6

Eqv.= This component is equivalent to the REF No. component listed above, and may be substituted on parts orders and repairs.

M.=Mounted side (T: Mounted on the Top side, B: Mounted on the Bottom side)
S.=Surface mount

[MAIN UNIT]

REF NO.	PARTS NO.	DESCRIPTION	M.	H/V LOCATION
C1310	4030017460	S.CER C1005 JB 1H 102K-T	T	54.1/13.7
C1311	4030017460	S.CER C1005 JB 1H 102K-T	T	40.7/13.7
C1314	4030017650	S.CER C1005 CH 1H 270J-T	B	44.3/6.3
C1315	4030017650	S.CER C1005 CH 1H 270J-T	B	44.0/9.6
C1316	4030017360	S.CER C1005 CH 1H 030B-T	B	46.1/7.1
C1317	4030016930	S.CER C1005 JB 1A 104K-T	B	58.3/8.5
C1318	4030017460	S.CER C1005 JB 1H 102K-T	B	70.9/4.9
C1319	4030017460	S.CER C1005 JB 1H 102K-T	T	49.6/2.5
C1320	4030017460	S.CER C1005 JB 1H 102K-T	B	51.6/6.9
C1321	4030017460	S.CER C1005 JB 1H 102K-T	T	112.2/104.1
C1322	4030017460	S.CER C1005 JB 1H 102K-T	T	47.8/47.3
C1323	4030017460	S.CER C1005 JB 1H 102K-T	T	46.8/46.4
C1324	4030020000	S.CER C1005 JB 1A 105K-T	T	93.9/73.0
C1325	4030018860	S.CER C1005 JB 0J 105K-T	T	94.7/68.6
C1326	4030017460	S.CER C1005 JB 1H 102K-T	T	128.0/26.4
C1328	4030017460	S.CER C1005 JB 1H 102K-T	T	131.4/28.3
C1329	4030017460	S.CER C1005 JB 1H 102K-T	T	134.4/26.7
C1330	4030017460	S.CER C1005 JB 1H 102K-T	T	134.2/28.3
C1331	4030016930	S.CER C1005 JB 1A 104K-T	B	118.2/75.1
C1332	4030017030	S.CER C1005 JB 1A 273K-T	B	119.1/79.0
C1333	4030019550	S.CER C1608 JB 1E 334K-T	B	99.9/95.0
C1334	4030019560	S.CER GRM21BB31C106KE15L	B	96.9/94.8
C1336	4030017460	S.CER C1005 JB 1H 102K-T	T	100.7/105.7
C1340	4510010230	S.ELE 10 CE 1000 LX	B	101.4/70.6
C1343	4030019550	S.CER C1608 JB 1E 334K-T	B	107.6/95.0
C1344	4030019560	S.CER GRM21BB31C106KE15L	B	104.6/94.8
C1346	4030017030	S.CER C1005 JB 1A 273K-T	B	120.7/73.7
C1487	4510010240	S.ELE 16 CE 680 LX	B	110.3/83.2
C1488	4030017600	S.CER C1005 CH 1H 080C-T	T	20.6/55.5
C1500	4030017650	S.CER C1005 CH 1H 270J-T	B	45.2/35.0
C1501	4030017460	S.CER C1005 JB 1H 102K-T	B	39.0/35.6
C1502	4030017460	S.CER C1005 JB 1H 102K-T	B	38.1/34.3
C1503	4030017460	S.CER C1005 JB 1H 102K-T	B	38.5/27.0
C1504	4030017460	S.CER C1005 JB 1H 102K-T	B	40.1/27.0
C1505	4030017460	S.CER C1005 JB 1H 102K-T	T	126.7/12.9
J1	6510014961	S.CON B2B-ZR-SM4-TF(LF)(SN)	T	90.2/118.2
J100	6510023110	CON 3008L-8P8C <KIN>		
J101	6450001440	CON HSJ1403-01-010		
J102	6510025940	CON PJ-3047S <XIN>		
J103	6510014961	S.CON B2B-ZR-SM4-TF(LF)(SN)	B	123.4/80.5
J300	6510025950	CON PCB-606(6P6C) BLACK <VKH>		
J301	6510029570	S.CON 20P5.0-JMCS-G-B-TF(N)	T	130.1/21.4
W1	7030014230	JUM RJ20S0OHM		
W300	8900016020	CAB OPC-1671 <TJM>		
EP1	6910014690	S.BEA MPZ1608S221A-T	T	102.1/113.6
EP2	6910018460	S.BEA MMZ1005Y102C-T	T	94.7/116.6
EP6	6910018460	S.BEA MMZ1005Y102C-T	T	68.5/73.1
EP100	6910018460	S.BEA MMZ1005Y102C-T	T	14.8/12.7
EP101	6910018460	S.BEA MMZ1005Y102C-T	T	15.9/12.7
EP102	6910018460	S.BEA MMZ1005Y102C-T	T	17.8/12.7
EP103	6910018460	S.BEA MMZ1005Y102C-T	T	18.7/12.7
EP104	6910018460	S.BEA MMZ1005Y102C-T	T	23.6/2.7
EP105	6910018460	S.BEA MMZ1005Y102C-T	T	24.7/5.7
EP106	6910018460	S.BEA MMZ1005Y102C-T	T	23.6/3.6
EP107	6910018460	S.BEA MMZ1005Y102C-T	T	26.3/7.7
EP111	6910014690	S.BEA MPZ1608S221A-T	T	116.8/105.5
EP113	6910018460	S.BEA MMZ1005Y102C-T	T	127.7/110.2
EP115	6910014690	S.BEA MPZ1608S221A-T	T	133.3/109.3
EP118	6910018460	S.BEA MMZ1005Y102C-T	T	127.7/109.3
EP200	6910018460	S.BEA MMZ1005Y102C-T	B	40.7/36.8
EP201	6910018460	S.BEA MMZ1005Y102C-T	B	40.6/29.4
EP202	6910018460	S.BEA MMZ1005Y102C-T	B	39.7/29.4
EP300	6910018460	S.BEA MMZ1005Y102C-T	T	131.6/12.4
EP304	6910018460	S.BEA MMZ1005Y102C-T	B	131.9/51.0
EP305	6910018460	S.BEA MMZ1005Y102C-T	B	131.9/47.8
EP306	6910018460	S.BEA MMZ1005Y102C-T	T	127.3/55.2
EP312	6910018460	S.BEA MMZ1005Y102C-T	T	130.3/26.7
EP315	6910018460	S.BEA MMZ1005Y102C-T	T	128.7/25.1
EP316	6910018460	S.BEA MMZ1005Y102C-T	T	128.4/17.8
EP320	6910018460	S.BEA MMZ1005Y102C-T	T	129.3/17.8
EP324	6910018460	S.BEA MMZ1005Y102C-T	B	134.0/21.5
EP351	6910018460	S.BEA MMZ1005Y102C-T	T	117.9/67.5
EP352	6910018460	S.BEA MMZ1005Y102C-T	T	130.2/12.4
EP357	6910018460	S.BEA MMZ1005Y102C-T	T	131.8/17.8
EP358	6910018460	S.BEA MMZ1005Y102C-T	T	132.8/17.8
EP360	6910018460	S.BEA MMZ1005Y102C-T	T	131.4/26.7
EP361	6910018460	S.BEA MMZ1005Y102C-T	T	132.0/25.1
EP362	6910018460	S.BEA MMZ1005Y102C-T	T	132.5/26.7
EP363	6910018460	S.BEA MMZ1005Y102C-T	T	125.0/12.0
EP364	6910018460	S.BEA MMZ1005Y102C-T	T	126.7/12.0
EP409	6910014690	S.BEA MPZ1608S221A-T	T	94.7/120.5

Eqv.= This component is equivalent to the REF No. component listed above, and may be substituted on parts orders and repairs.

M.=Mounted side (T: Mounted on the Top side, B: Mounted on the Bottom side)
S.=Surface mount

SECTION 7 MECHANICAL PARTS

[CHASSIS PARTS]

REF NO.	ORDER NO.	DESCRIPTION		QTY.
W1	8600037590	SP CABLE -1 70MM <PHL>		1
J1	6510004881	MR-DSE-01-1 <GA>		1
SP1	2510001160	057P0802		1
MF1	2710000820	EFB0412VHD-6P38 <USE>HK		1
MP1	8010023321	3598 CHASSIS-1 <YPE>		1
MP2	8210030390	3598 CHASSIS PANEL		1
MP3	8110010790	3598 U-COVER ASSEMBLY		1
MP4	8110010750	3598 L-COVER		1
MP5	8110009020	2969 FAN COVER		1
MP6	8930078590	3167 SP RUBBER (TOP)		1
MP7	8930089330	3484 CLIP Y1311		1
MP8	8810009611	FLAT M2.6X 6 ZK3		15
MP9	8810008661	PHBT M3 X 8 NI-ZC3		13
MP10	8810008661	PHBT M3 X 8 NI-ZC3		4
MP11	8810008661	PHBT M3 X 8 NI-ZC3		2
MP12	8810010141	SCREW PH M3 X30 ZK3		4
MP14	8930069590	THERMAL SHEET (BB)TC-400HS-1.4 (9.7X2)		1
MP15	8930091690	SPONGE (NB)		1
MP16	8930091700	HIMELON SHEET (DL)		3
MP17	8930085740	3401 GPS SPONGE		1
MP20	8930091740	SHIELD SPONGE (DG)	#02	2
	8930091740	SHIELD SPONGE (DG)	#03	2
	8930091740	SHIELD SPONGE (DG)	#05	2
	8930091740	SHIELD SPONGE (DG)	#10	2
MP21	8930091720	FERRITE SHEET (AW)	#02	1
	8930091720	FERRITE SHEET (AW)	#03	1
	8930091720	FERRITE SHEET (AW)	#05	1
	8930091720	FERRITE SHEET (AW)	#10	1
MP22	8930091730	FERRITE SHEET (AX)	#02	1
	8930091730	FERRITE SHEET (AX)	#03	1
	8930091730	FERRITE SHEET (AX)	#05	1
	8930091730	FERRITE SHEET (AX)	#10	1

[CONTROL UNIT]

REF NO.	ORDER NO.	DESCRIPTION	QTY.
J6	6450002420	9691-6614 <SJC>	1
J101	6510023110	3008L-8P8C <KIN>	1
DS1	5030003920	JIC-LTNN013601-01 <RYOYO>	1
S14	2250000790	EC12E24204A9	1
S15	2250000790	EC12E24204A9	1
EP15	8930091410	SRCN-3598-SP-N-W (SHJ)	1
MP1	8210030360	3598 FRONT PANEL	1
MP3	8210030450	3598 REAR PANEL ASSEMBLY	1
MP4	8210030380	3598 REFLECTOR	1
MP5	8930091190	3598 LCD PLATE Y1338	1
MP6	8930091310	3598 LCD FILTER	1
MP7	8610015560	KNOB N-428	2
MP9	8610011170	KNOB N290	4
MP11	8930091160	3598 C-KEY	1
MP12	8930091170	3598 L-KEY	1
MP13	8930091180	3598 R-KEY	1
MP14	8810008991	PHBT M2 X10 NI-ZK3	4

[MAIN UNIT]

REF NO.	ORDER NO.	DESCRIPTION	QTY.
J1*	6510014961	B2B-ZR-SM4-TF (LF) (SN)	1
J100	6510023110	3008L-8P8C <KIN>	1
J101	6450001440	HSJ1403-01-010	1
J102	6510025940	PJ-3047S <XIN>	1
J103*	6510014961	B2B-ZR-SM4-TF (LF) (SN)	1
J300	6510025950	PCB-606 (6P6C) BLACK <VKH>	1
J301*	6510029570	20P5.0-JMCS-G-B-TF (N)	1
W1	7030014230	RJ20S0OHM	1
W300	8900016020	OPC-1671	1
MP200*	8510019340	3179 VCO CASE Y1142	1
MP202*	8510016471	2775 VCO CASE-1	1
MP203*	8510016471	2775 VCO CASE-1	1
MP204*	8510019340	3179 VCO CASE Y1142	1
MP206*	8510016471	2775 VCO CASE-1	1
MP207*	8510016471	2775 VCO CASE-1	1
MP208	8510019350	3179 VCO COVER Y1143	2
MP212	8930060270	2633 M-SHEET	2
MP213	8930059770	2633 M-HOLDER Y668	2
MP214	8510016461	2775 VCO COVER-1	4

[ACCESSORIES]

REF NO.	ORDER NO.	DESCRIPTION	QTY.
F1	5210000121	FGB 15A PBF (FGB0 125V)	1
MC1	(Optional)	HM-207	1
W1	8900015280	OPC-345A	1
W2	(Optional)	OPC-837	1
MP1	8930007300	MIC HANGER	1

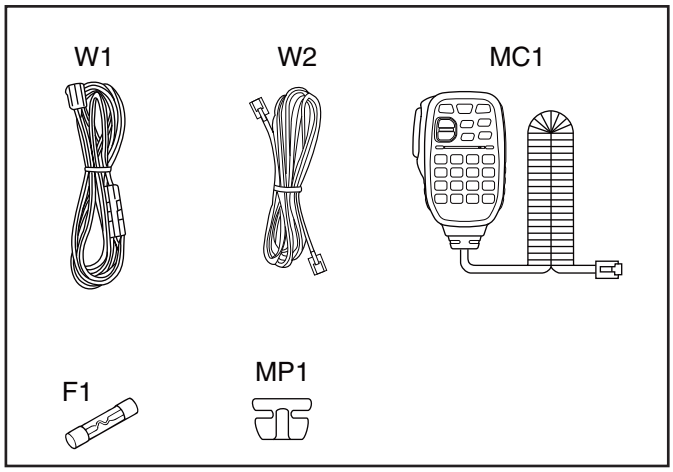

*: Refer to "**BOARD LAYOUTS**" for the location.
Screw abbreviations A, B0, BT: Self-tapping PH: Pan head ZK: Black NI-ZU: Nickel-Zinc SUS: Stainless

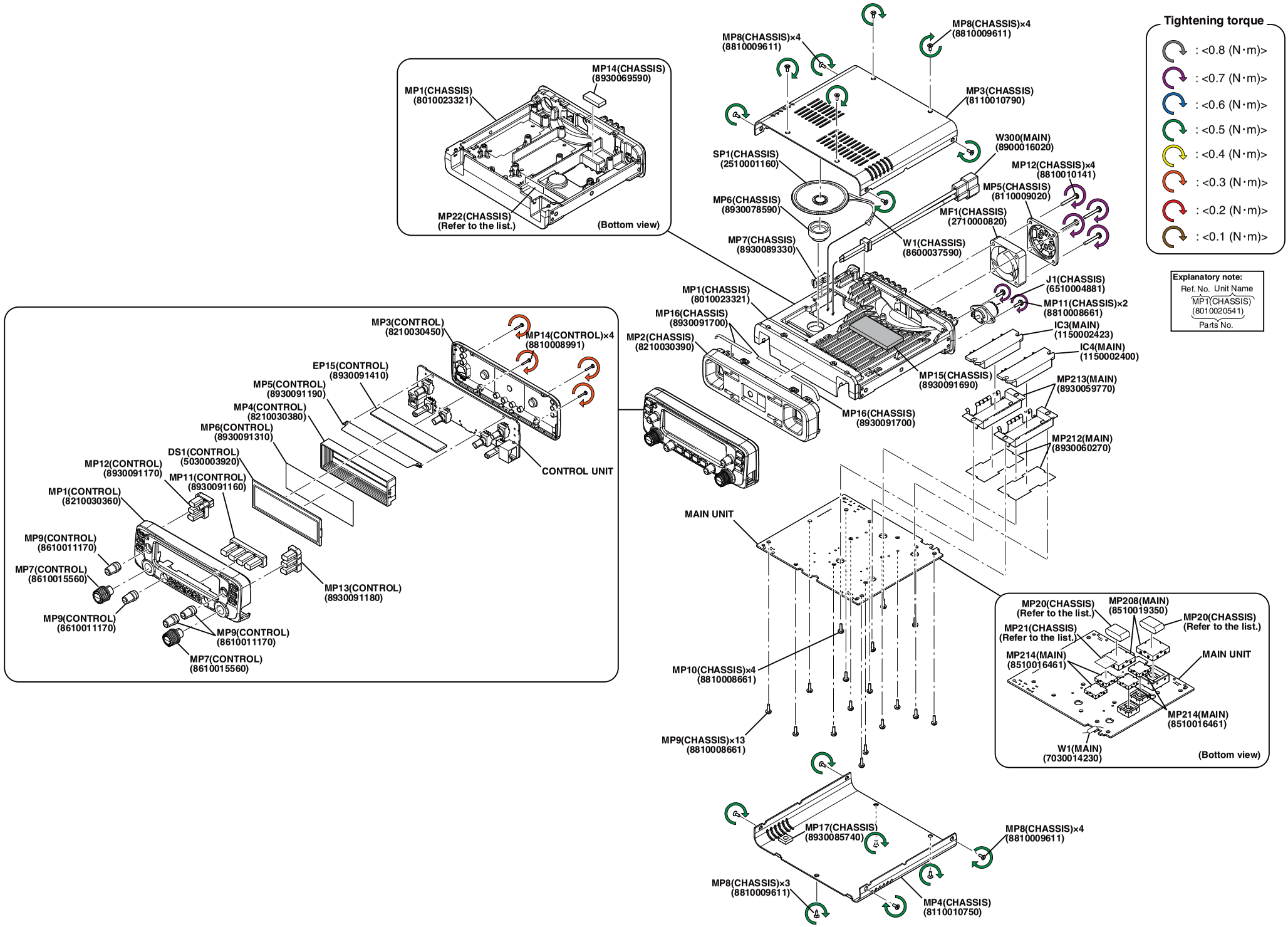
Tightening torque
: <0.8 (N·m)>
: <0.7 (N·m)>
: <0.6 (N·m)>
: <0.5 (N·m)>
: <0.4 (N·m)>
: <0.3 (N·m)>
: <0.2 (N·m)>
: <0.1 (N·m)>
Explanatory note:
Ref. No. Unit Name
MP1(CHASSIS)
(8010020541)
Parts No.
MP14(CHASSIS)
(8930069590)
MP1(CHASSIS)
(8010023321)
MP22(CHASSIS)
(Refer to the list.)
(Bottom view)
MP8(CHASSIS)×4
(8810009611)
MP8(CHASSIS)×4
(8810009611)
MP3(CHASSIS)
(8110010790)
W300(MAIN)
(8900016020)
SP1(CHASSIS)
(2510001160)
MP12(CHASSIS)×4
(8810010141)
MP5(CHASSIS)
(8110009020)
MP6(CHASSIS)
(8930078590)
MF1(CHASSIS)
(2710000820)
MP7(CHASSIS)
(8930089330)
W1(CHASSIS)
(8600037590)
J1(CHASSIS)
(6510004881)
MP1(CHASSIS)
(8010023321)
MP11(CHASSIS)×2
(8810008661)
MP16(CHASSIS)
(8930091700)
IC3(MAIN)
(1150002423)
MP2(CHASSIS)
(8210030390)
IC4(MAIN)
(1150002400)
MP15(CHASSIS)
(8930091690)
MP213(MAIN)
(8930059770)
MP16(CHASSIS)
(8930091700)
MP212(MAIN)
(8930060270)
MP3(CONTROL)
(8210030450)
MP14(CONTROL)×4
(8810008991)
EP15(CONTROL)
(8930091410)
MP5(CONTROL)
(8930091190)
MP4(CONTROL)
(8210030380)
MP6(CONTROL)
(8930091310)
DS1(CONTROL)
(5030003920)
MP12(CONTROL)
(8930091170)
MP11(CONTROL)
(8930091160)
CONTROL UNIT
MP1(CONTROL)
(8210030360)
MP9(CONTROL)
(8610011170)
MP7(CONTROL)
(8610015560)
MP13(CONTROL)
(8930091180)
MP9(CONTROL)
(8610011170)
MP9(CONTROL)
(8610011170)
MP7(CONTROL)
(8610015560)
MAIN UNIT
MP10(CHASSIS)×4
(8810008661)
MP9(CHASSIS)×13
(8810008661)
MP20(CHASSIS)
(Refer to the list.)
MP208(MAIN)
(8510019350)
MP20(CHASSIS)
(Refer to the list.)
MP21(CHASSIS)
(Refer to the list.)
MP214(MAIN)
(8510016461)
MAIN UNIT
MP214(MAIN)
(8510016461)
W1(MAIN)
(7030014230)
(Bottom view)
MP17(CHASSIS)
(8930085740)
MP8(CHASSIS)×4
(8810009611)
MP8(CHASSIS)×3
(8810009611)
MP4(CHASSIS)
(8110010750)

SECTION 8 BOARD LAYOUTS

The actual configuration of the PC board can be seen by viewing the top and bottom BOARD LAYOUT pages together.

• CONTROL UNIT (B-8145B) (TOP VIEW)

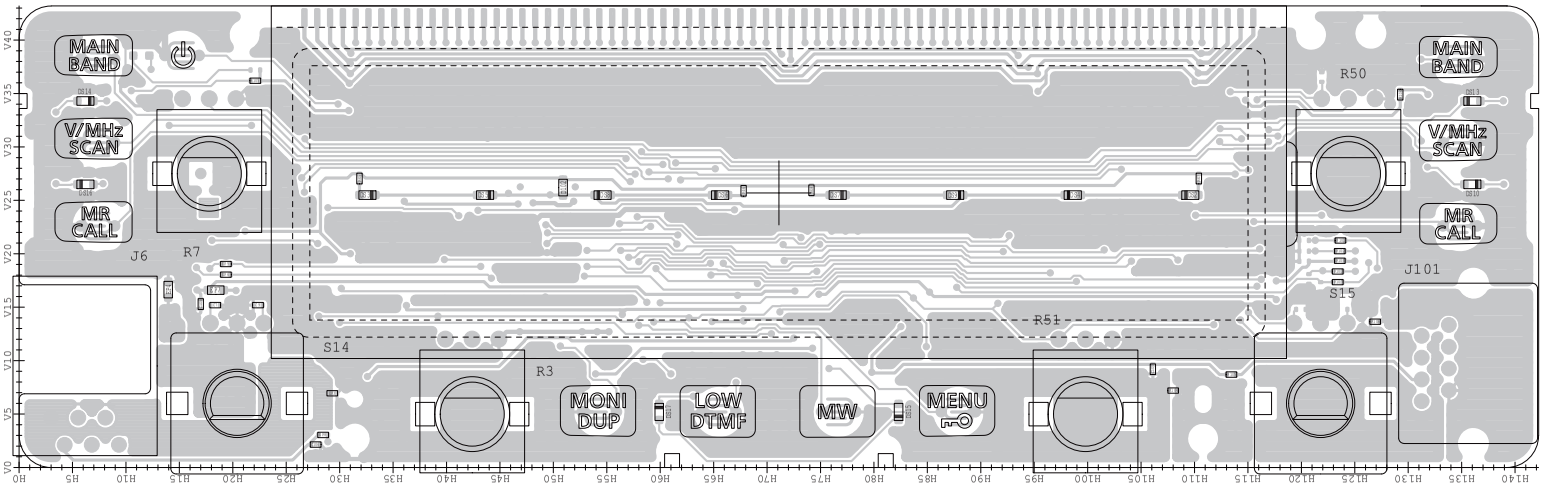

The actual configuration of the PC board can be seen by viewing the top and bottom BOARD LAYOUT pages together.

• CONTROL UNIT (B-8145B) (BOTTOM VIEW)

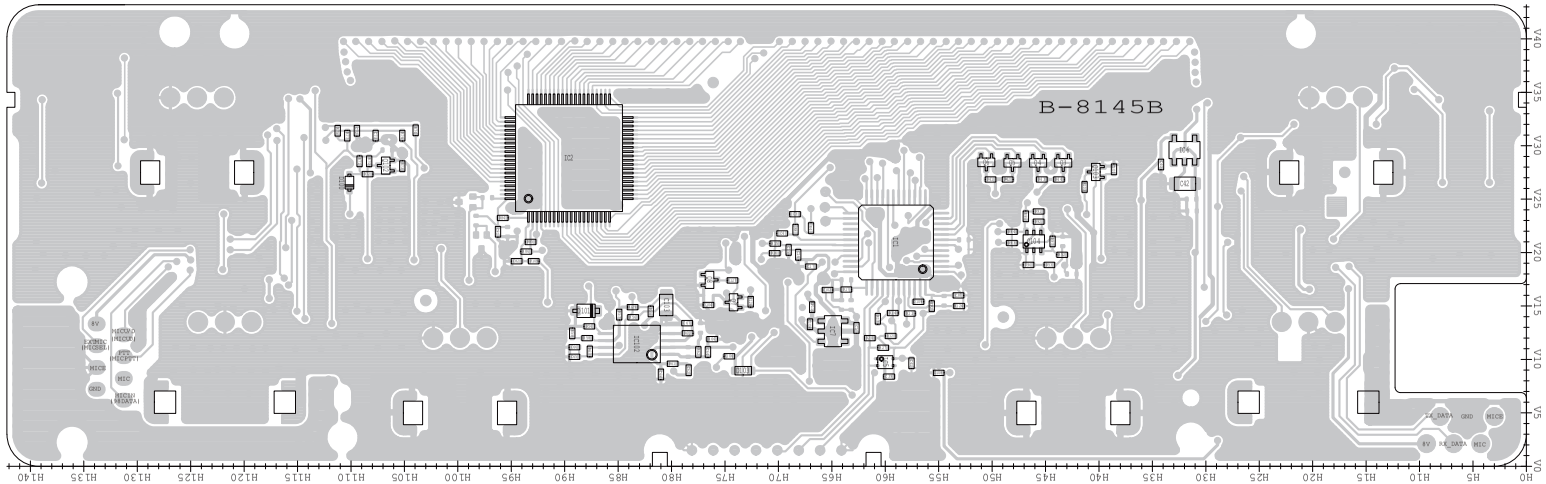

The actual configuration of the PC board can be seen by viewing the top and bottom BOARD LAYOUT pages together.

• MAIN UNIT (B-8144B) (TOP VIEW)

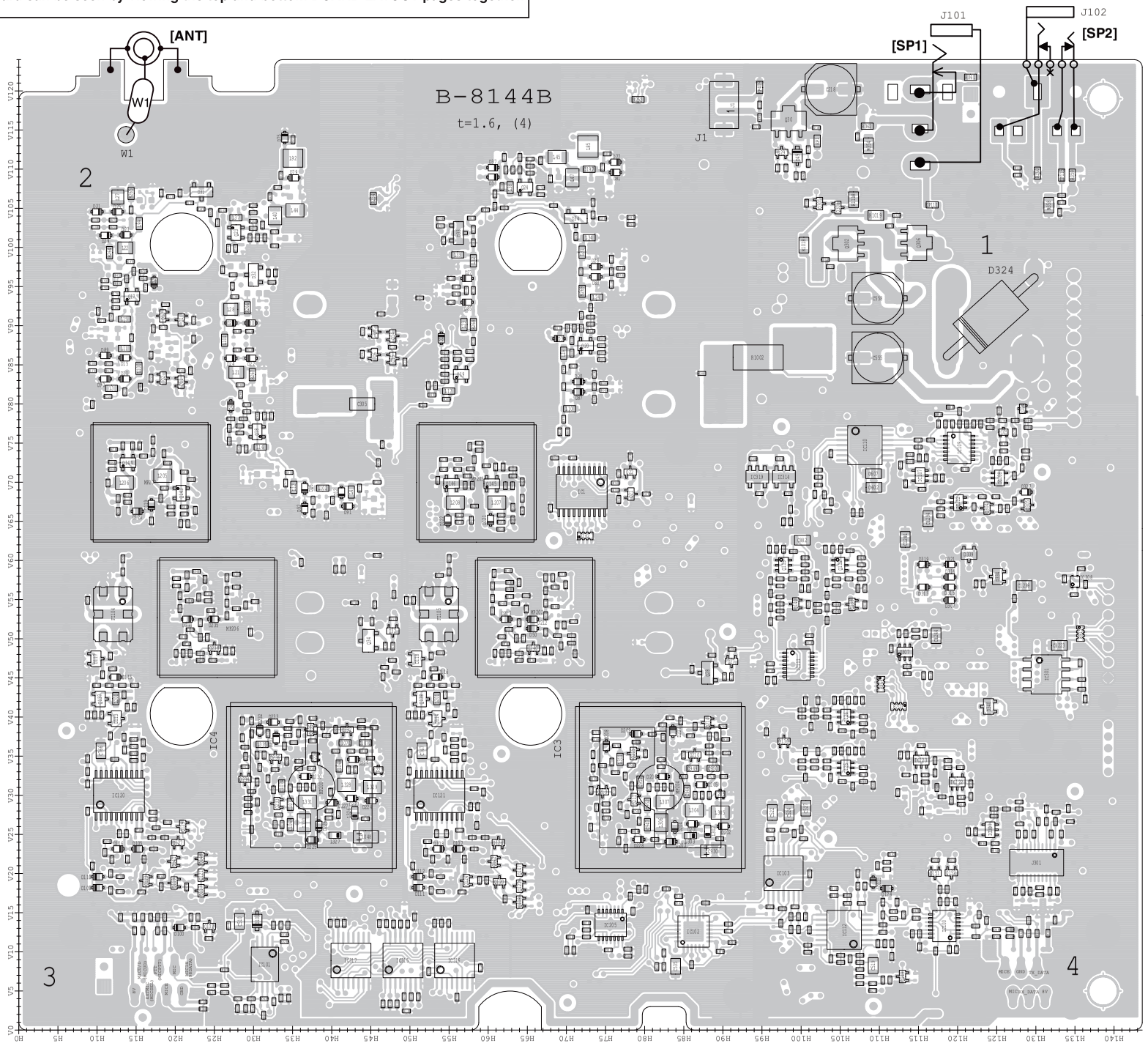

The actual configuration of the PC board can be seen by viewing the top and bottom BOARD LAYOUT pages together.

• MAIN UNIT (B-8144B) (BOTTOM VIEW)

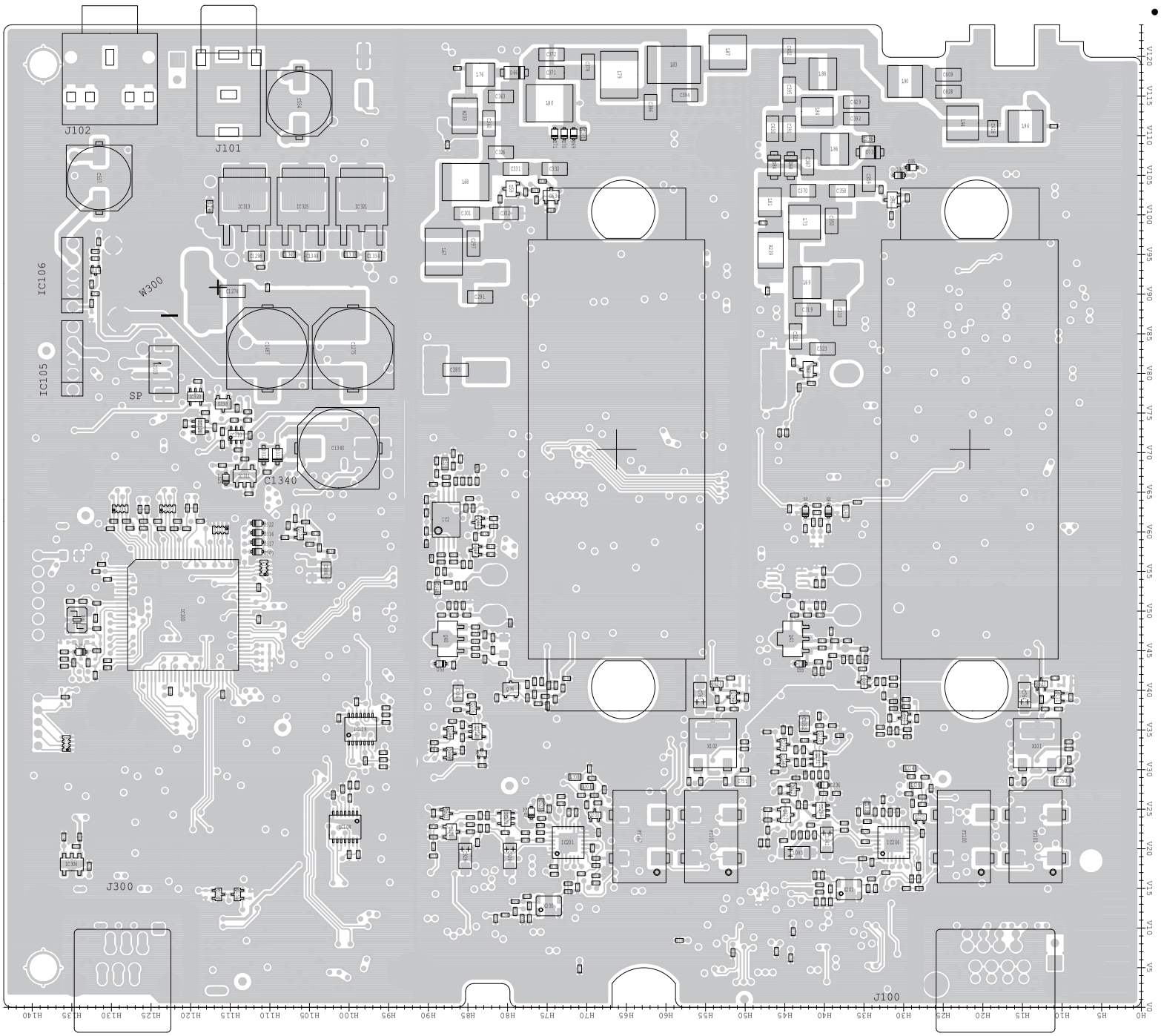

SECTION 9 BLOCK DIAGRAM

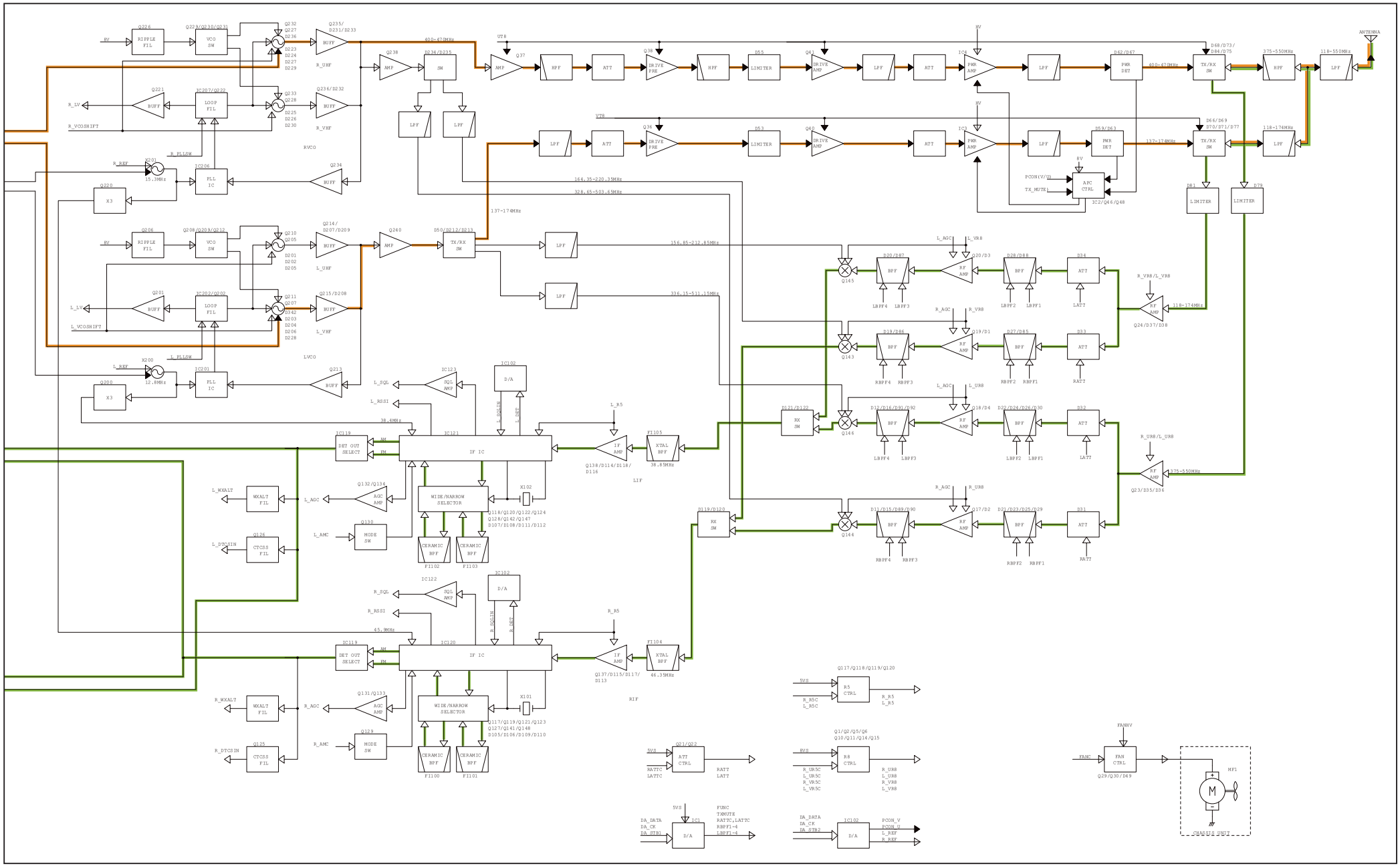

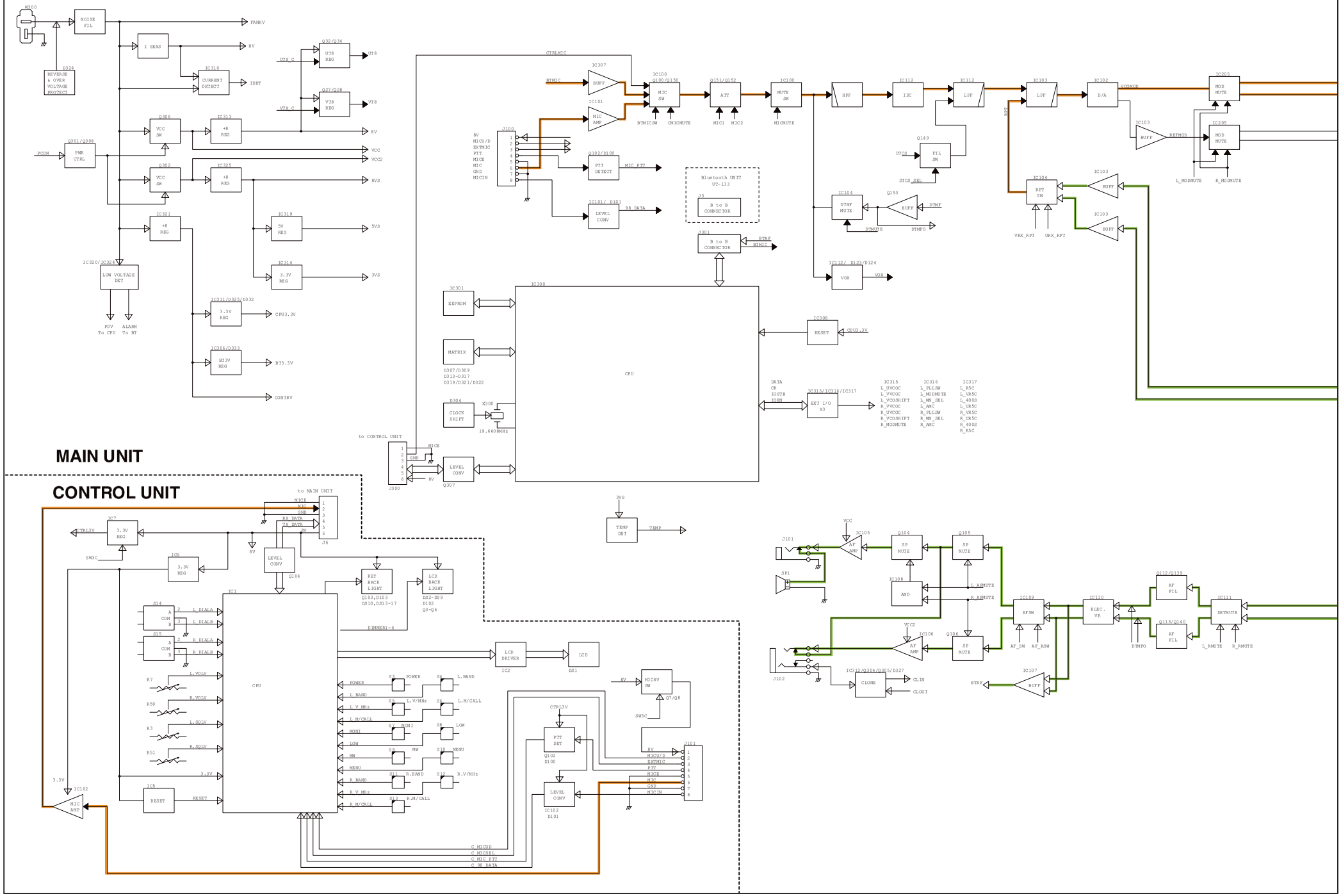
MAIN UNIT
CONTROL UNIT
CPU
EEPROM
MATRIX
CLOCK SHIFT
19.660MHz
RESET
LEVEL CONV
EXT I/O X3
VOX
DTMF MUTE
BUFF
AF AMP
SP MUTE
AND
AFSW
ELEC. VR
DETMUTE
AF FIL
RPT SW
MOD MUTE
D/A
LPF
HPF
IDC
MUTE SW
ATT
MIC SW
MIC AMP
PTT DETECT
LEVEL CONV
B to B CONNECTOR
Bluetooth UNIT
U7-133
to CONTROL UNIT
to MAIN UNIT
LCD DRIVER
LCD
KEY BACK LIGHT
LCD BACK LIGHT
CLONE
TEMP DET
MIC AMP
PTT DET
MICSW SW
3.3V REG
5V REG
+8 REG
VCC SW
PWR CTRL
LOW VOLTAGE DET
NOISE FIL
I SENS
CURRENT DETECT
REVERSE & OVER VOLTAGE PROTECT
V78 REG
BUFF
FANHV
HV
IDET
VCC
VCC2
8V
5VS
3VS
CPU3.3V
BT3.3V
CONT8V
PDV To CPU
ALARM To BT
RESET
SP1
J100
J101
J102
J300
J301
J3
J6
IC100
IC101
IC102
IC103
IC104
IC105
IC106
IC107
IC108
IC109
IC110
IC111
IC112
IC205
IC300
IC301
IC307
IC308
IC310
IC313
IC314
IC315/IC316/IC317
IC319
IC320/IC324
IC321
IC325
IC1
IC2
IC5
IC6
IC7
IC102
Q100/Q150
Q101/Q151
Q102/D100
Q104
Q105
Q106
Q107/Q108
Q112/Q139
Q113/Q140
Q149
Q153
Q301/Q308
Q302
Q306
Q307
Q32/Q34
Q27/Q28
D324
D304
D307/D309
D313-D317
D319/D321/D322
D101
D102
Q103,D103
D310,D313-17
DS2-DS9
Q3-Q6
S3 POWER
S4 L.BAND
S5 L.V/MHz
S6 L.M/CALL
S7 MONI
S8 LOW
S9 MW
S10 MENU
S11 R.BAND
S12 R.V/MHz
S13 R.M/CALL
S14
S15
R7
R50
R3
R51
L_VOLV
R_VOLV
L_SQLV
R_SQLV
L_DIALA
L_DIALB
R_DIALA
R_DIALB
DIMMER1-4
8V
3VS
VCC
VCC2
5V
3.3V
BTAF
BTMIC
MICIN
MICK
MICD
MICSEL
MIC_PTT
98_DATA
VOX
DTMF
DTMFO
DTMFI
DTCS
DTCS_SEL
CLIN
CLOUT
VRX_RPT
URX_RPT
L_MODMUTE
R_MODMUTE
L_RMUTE
R_RMUTE
L_AFMUTE
R_AFMUTE
AF_SW
AF_RSW
REFMOD
VCOMOD
C_MICUD
C_MICSEL
C_MIC_PTT
C_98_DATA
C7SLMIC
C7SL3V
SW3C
CTRL3V
RX_DATA
TX_DATA
MICK
MICD
MICSEL
MIC
GND
MICIN
PTT
EXTMIC
DATA
CK
IOSTB
IORN
L_VVCOC
L_VCOSHIFT
R_VVCOC
R_VCOSHIFT
R_MODMUTE
L_PLLSW
L_MODMUTE
L_WN_SEL
L_AMC
R_PLLSW
R_WN_SEL
R_AMC
L_R5C
L_VR5C
L_40GS
L_UR5C
R_VR5C
R_UR5C
R_40GS
R_R5C

SECTION 10 VOLTAGE DIAGRAM

• **CONTROL UNIT**

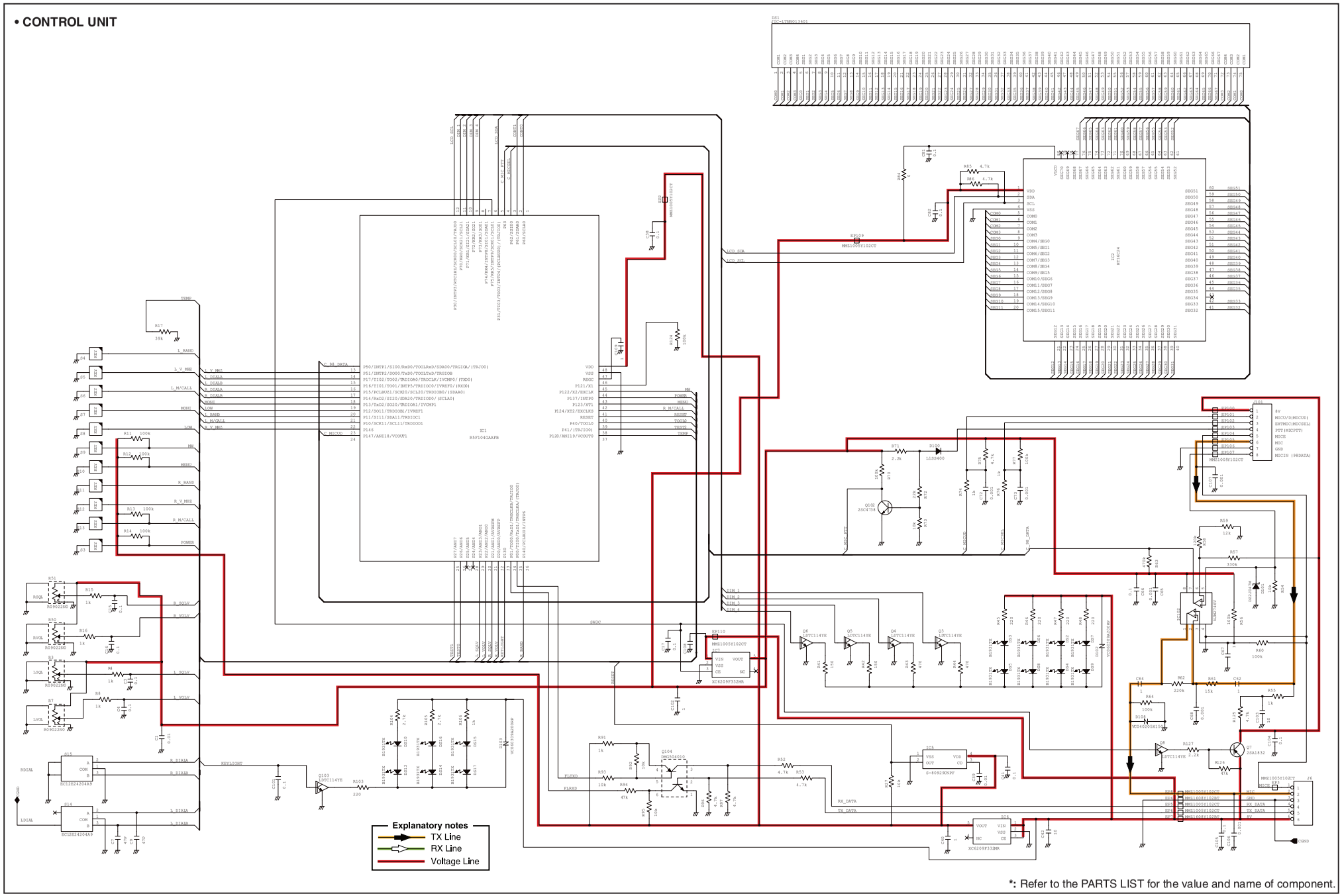

*: Refer to the PARTS LIST for the value and name of component.

• **MAIN UNIT (1/8)**

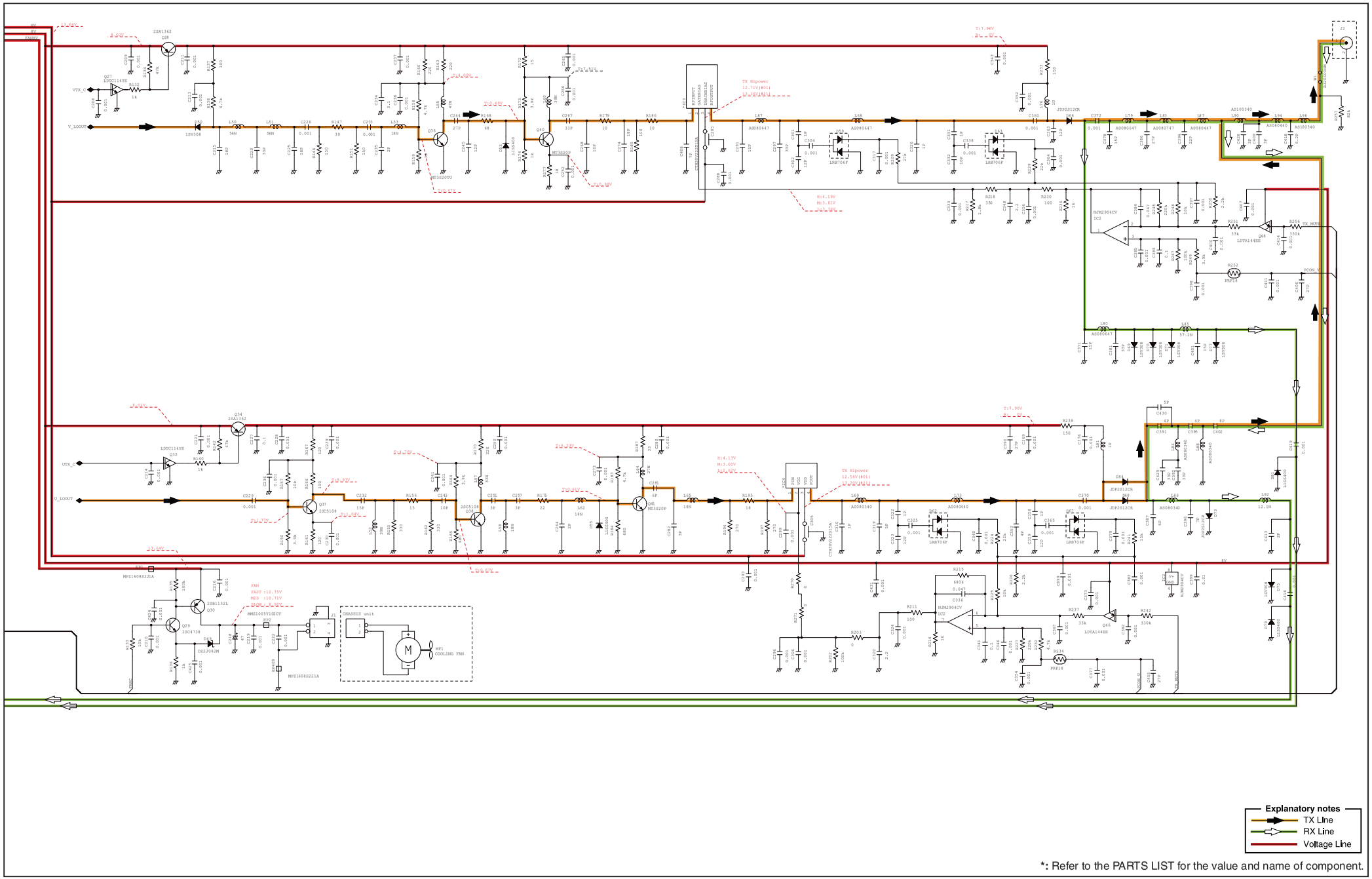

*: Refer to the PARTS LIST for the value and name of component.

• MAIN UNIT (2/8)

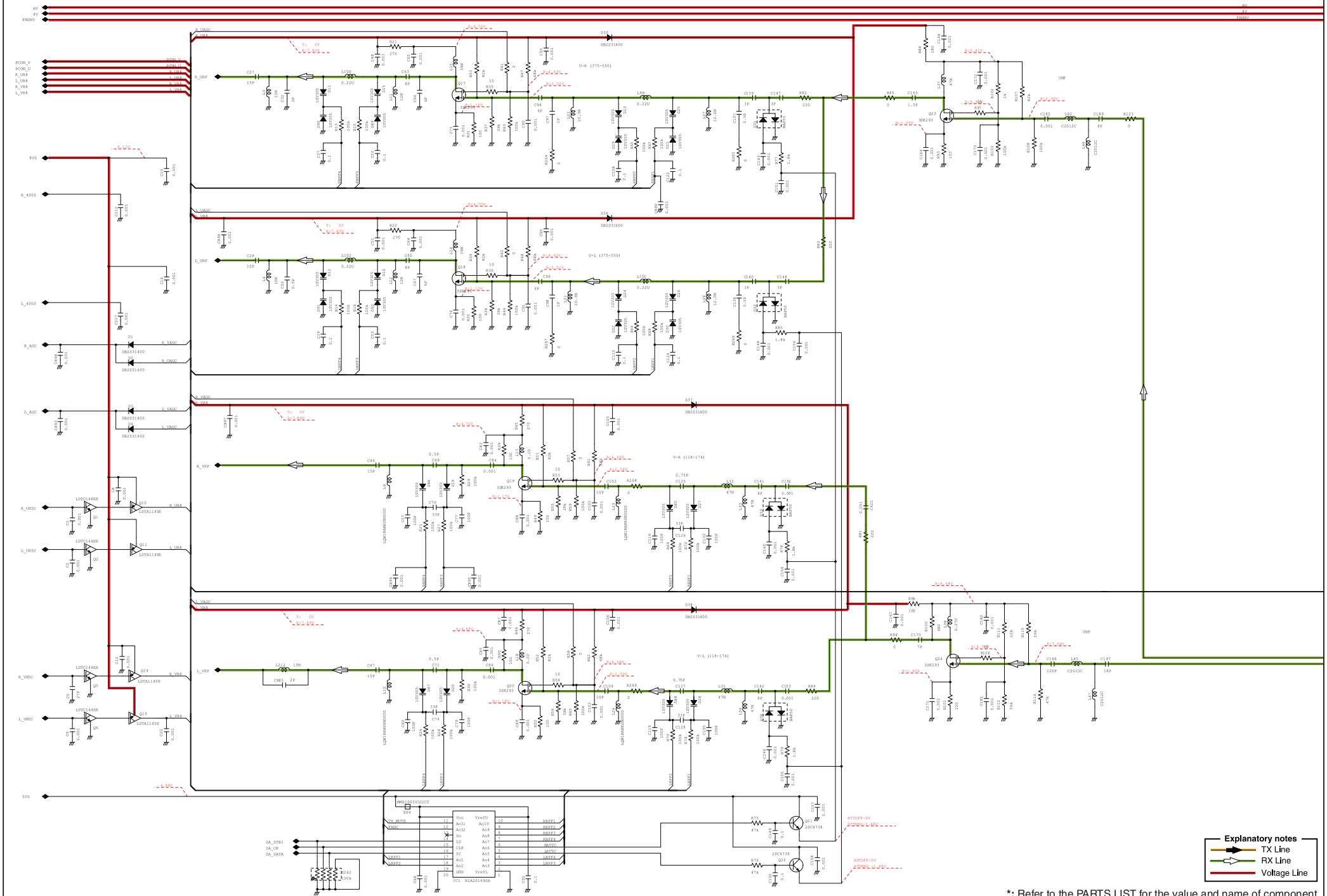

*: Refer to the PARTS LIST for the value and name of component.

• MAIN UNIT (3/8)

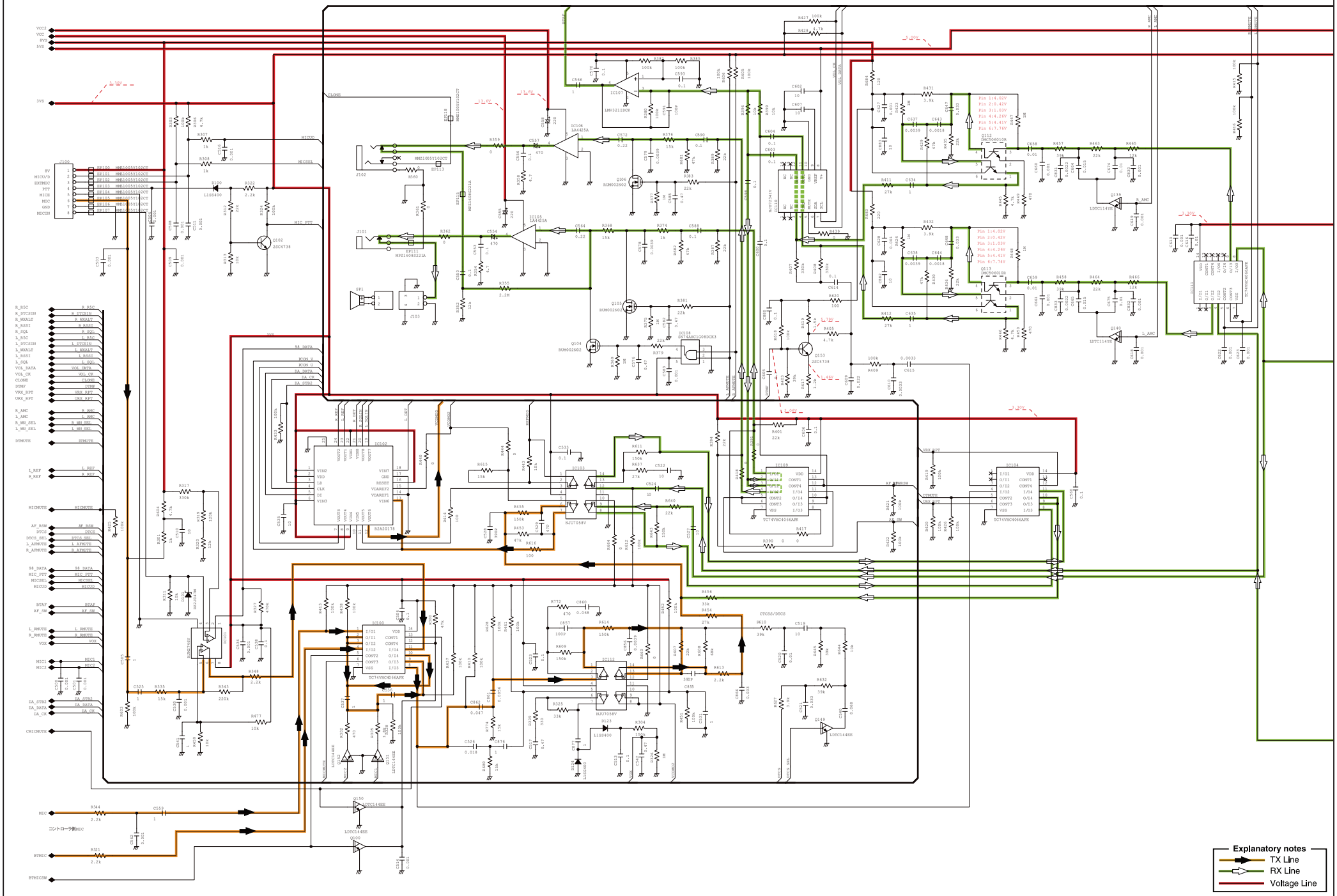

*: Refer to the PARTS LIST for the value and name of component.

• MAIN UNIT (4/8)

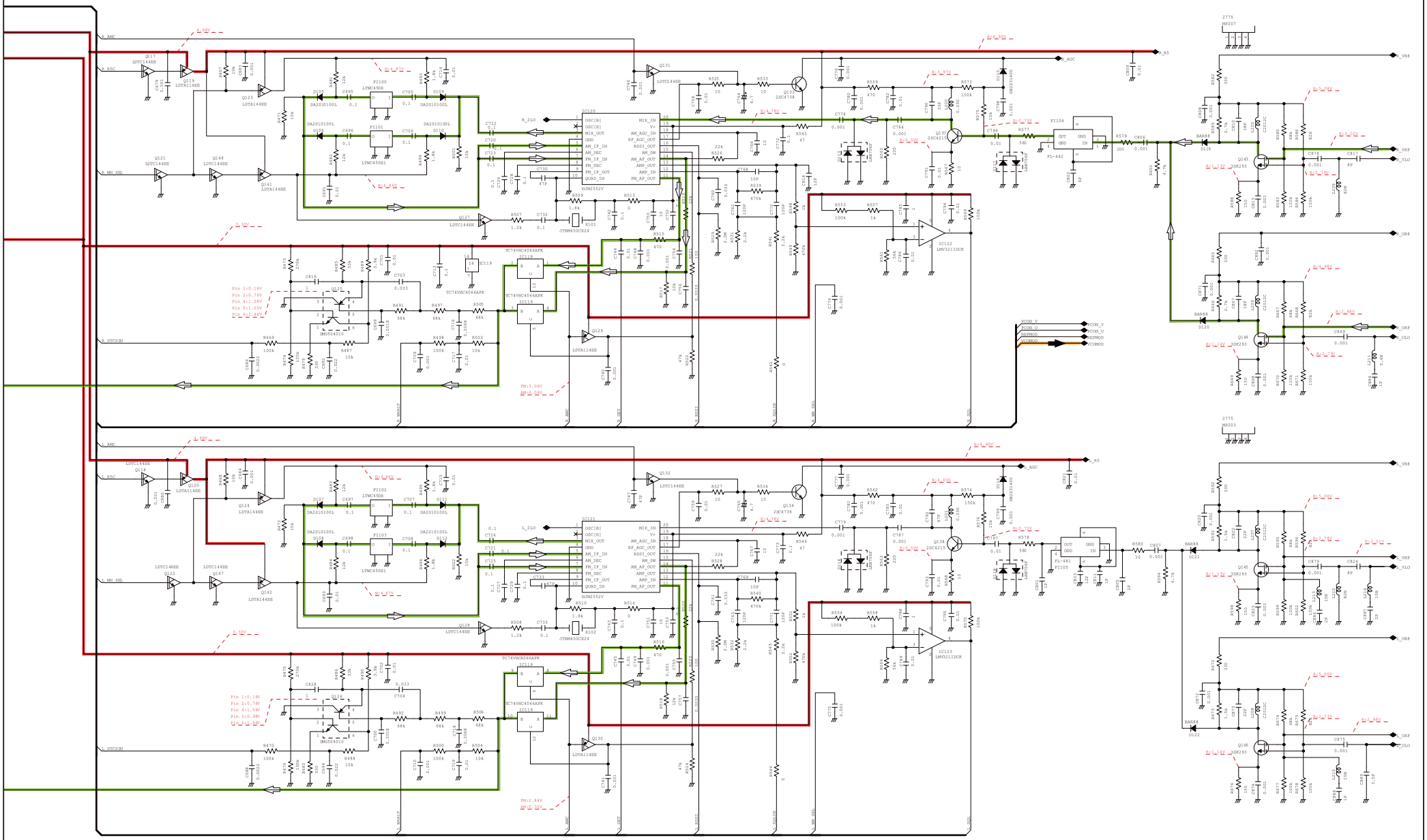

*: Refer to the PARTS LIST for the value and name of component.

• MAIN UNIT (5/8)

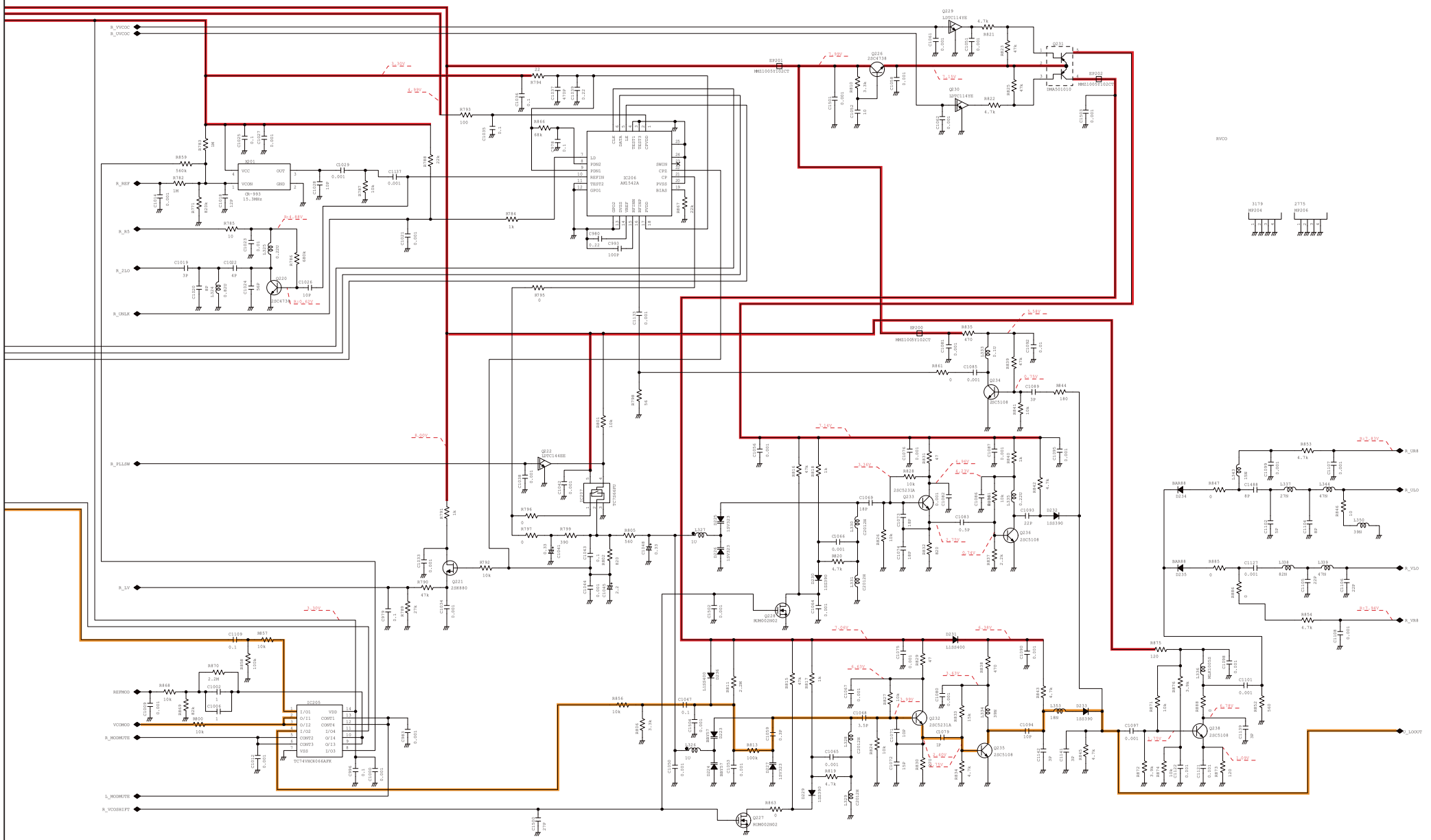

Explanatory notes
TX Line
RX Line
Voltage Line

*: Refer to the PARTS LIST for the value and name of component.

• MAIN UNIT (6/8)

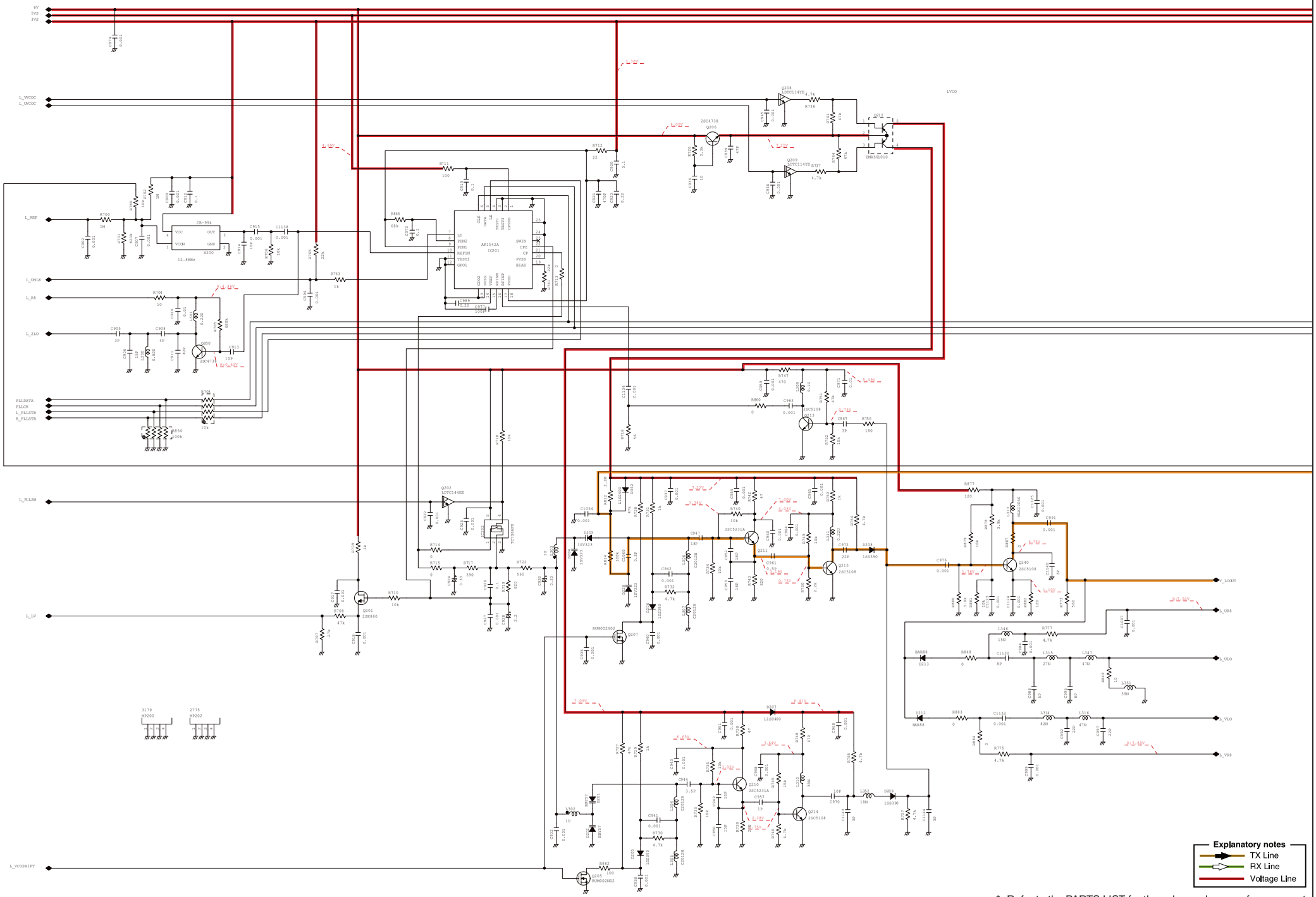

*: Refer to the PARTS LIST for the value and name of component.

• MAIN UNIT (7/8)

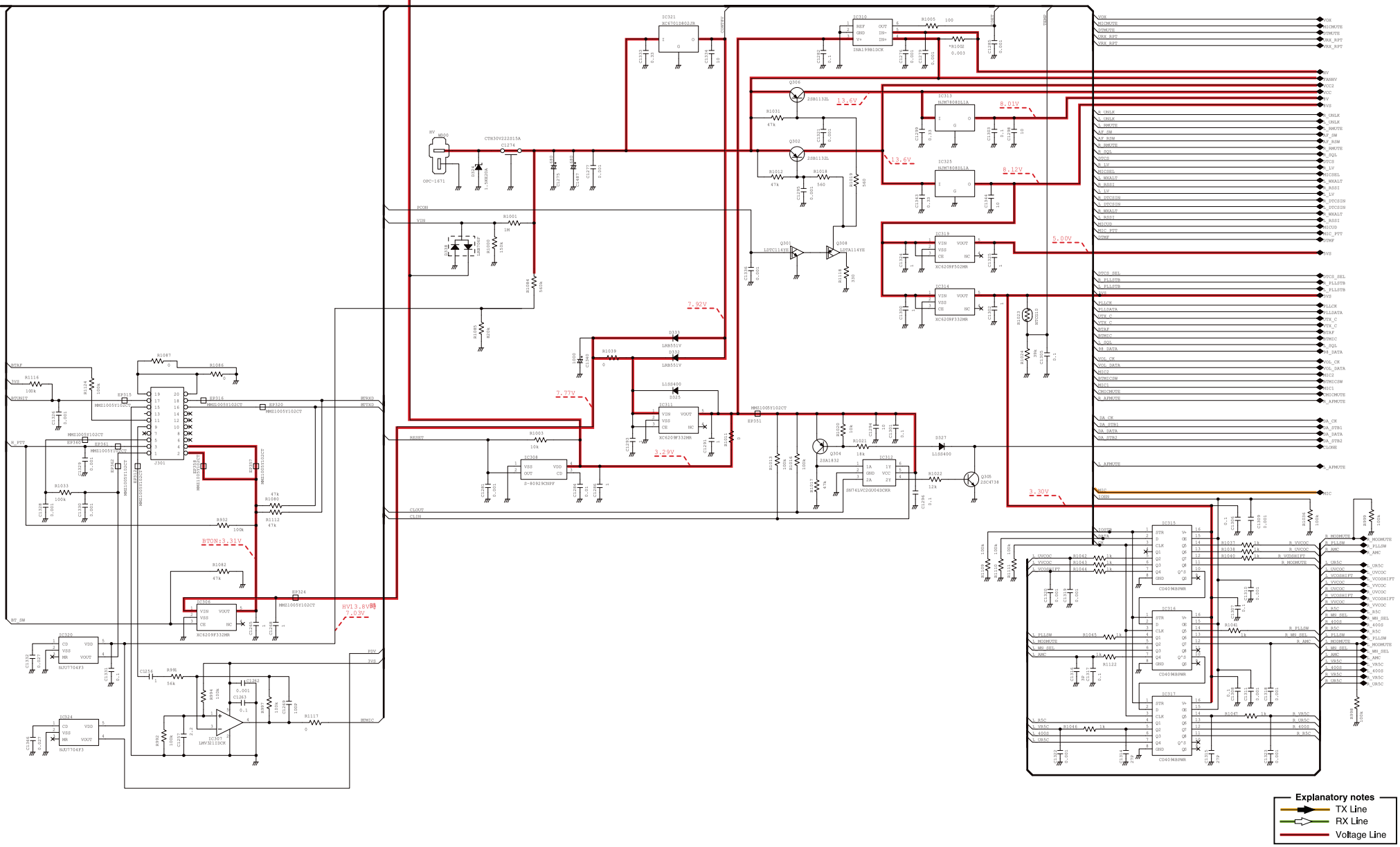

*: Refer to the PARTS LIST for the value and name of component.

• MAIN UNIT (8/8)

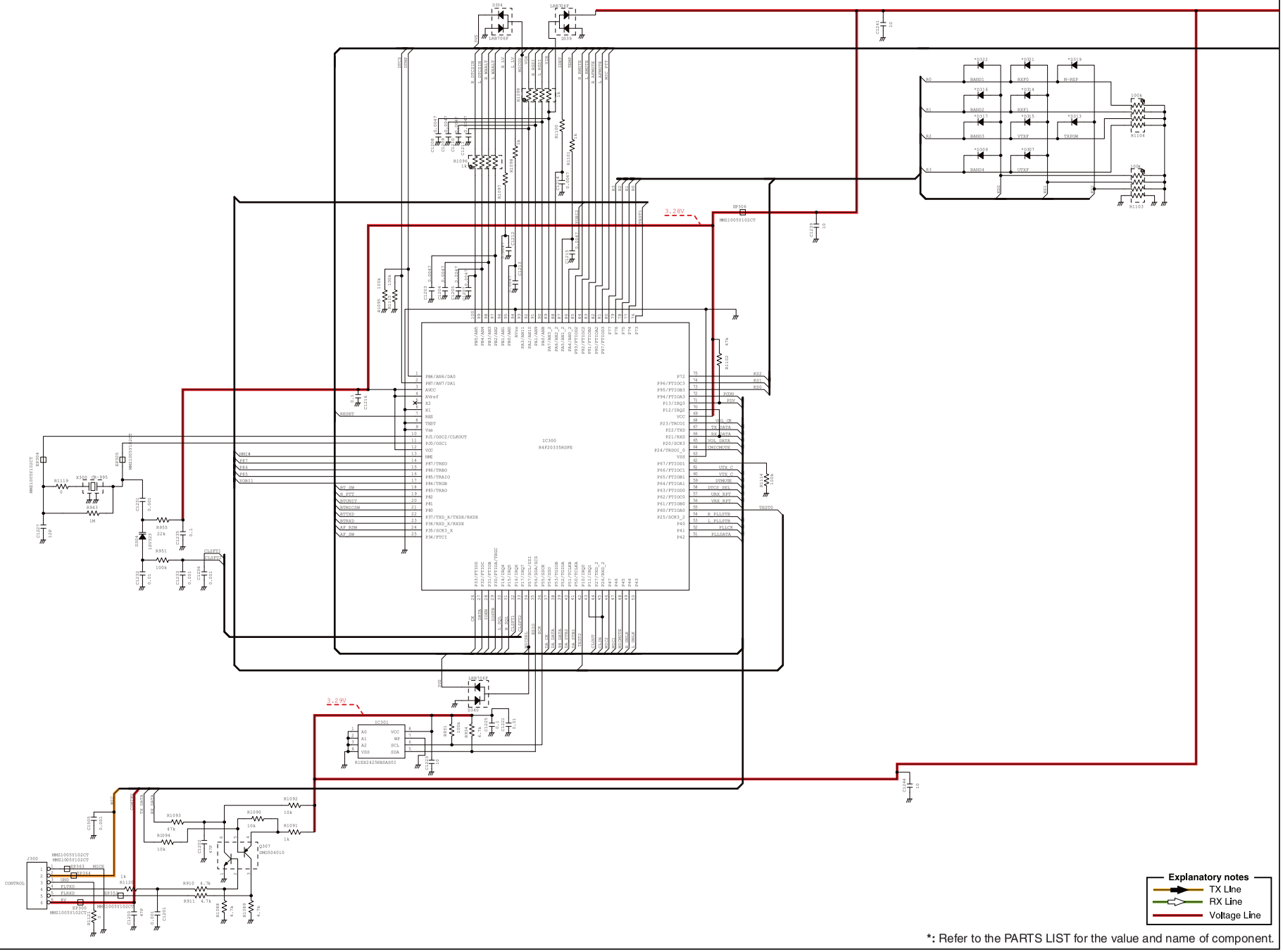

*: Refer to the PARTS LIST for the value and name of component.

Icom Inc.

1-1-32, Kamiminami, Hirano-ku, Osaka 547-0003, Japan
Phone : +81 (06) 6793 5302
Fax : +81 (06) 6793 0013
URL : http://www.icom.co.jp/world/index.html

Icom America Inc.

<Corporate Headquarters>
12421 Willows Road NE, Kirkland, WA 98034, U.S.A.
Phone : +1 (425) 454-8155 Fax : +1 (425) 454-1509
URL : http://www.icomamerica.com
E-mail : sales@icomamerica.com
<Customer Service>
Phone : +1 (425) 454-7619

Icom Canada

Glenwood Centre #150-6165
Highway 17A Delta,B.C., V4K 5B8, Canada
Phone : +1 (604) 952-4266 Fax : +1 (604) 952-0090
URL : http://www.icomcanada.com
E-mail : info@icomcanada.com

Icom (Australia) Pty. Ltd.

Unit 1 / 103 Garden Road, Clayton VIC 3168 Australia
Phone : +61 (03) 9549-7500 Fax : +61 (03) 9549-7505
URL : http://www.icom.net.au
E-mail : sales@icom.net.au

Icom New Zealand

39C Rennie Drive, Airport Oaks,
Auckland, New Zealand
Phone : +64 (09) 274 4062 Fax : +64 (09) 274 4708
URL : http://www.icom.co.nz
E-mail : inquiries@icom.co.nz

Shanghai Icom Ltd.

No.101, Building 9, Caifuxingyuan Park, No.188 Maoting Road,
Chedun Town, Songjiang District, Shanghai, 201611, China
Phone : +86 (021) 6153 2768
Fax : +86 (021) 5765 9987

Icom Brazil

Rua Itororó, 444 Padre Eustáquio Belo Horizonte MG,
CEP: 30720-450 Brazil
Phone : +55 (31) 3582 8847 Fax : +55 (31) 3582 8987
E-mail : sales@icombrazil.com

Icom (Europe) GmbH

Communication Equipment
Auf der Krautweide 24
65812 Bad Soden am Taunus, Germany
Phone : +49 (6196) 76685-0 Fax : +49 (6196) 76685-50
URL : http://www.icomeurope.com
E-mail : info@icomeurope.com

Icom Spain S.L

Ctra. Rubi, No. 88 Bajos A 08174, Sant Cugat del Valles, Barcelona, Spain
Phone : +34 (93) 590 26 70 Fax : +34 (93) 589 04 46
URL : http://www.icomspain.com
E-mail : icom@icomspain.com

Icom (UK) Ltd.

Blacksole House, Altira Park, Herne Bay, Kent CT6 6GZ, UK
Phone : +44 (0) 1227 741741 Fax : +44 (0) 1227 741742
URL : http://www.icomuk.co.uk
E-mail : info@icomuk.co.uk

Icom France s.a.s.

Zac de la Plaine
1 Rue Brindejonc des Moulinais BP 5804
31505 Toulouse Cedex, France
Phone : +33 (5) 61 36 03 03 Fax : +33 (5) 61 36 03 00
URL : http://www.icom-france.com
E-mail : icom@icom-france.com

Asia Icom Inc.

6F No.68, Sec. 1 Cheng-Teh Road, Taipei, Taiwan, R.O.C.
Phone : +886 (02) 2559 1899 Fax : +886 (02) 2559 1874
URL : http://www.asia-icom.com
E-mail : sales@asia-icom.com

Count on us!

Icom Inc.
1-1-32, Kamiminami, Hirano-ku, Osaka 547-0003, Japan

S-15120XZ-C1
© 2015 Icom Inc.